УДК 621.919.2:006.354 Группа Г23

ГОСУДАРСТВЕННЫЙ СТАНДАРТ РОССИЙСКОЙ ФЕДЕРАЦИИ

# ПРОТЯЖКИ С НАВЕРТНЫМ ХВОСТОВИКОМ ДЛЯ ШЛИЦЕВЫХ ОТВЕРСТИЙ С ЭВОЛЬВЕНТНЫМ ПРОФИЛЕМ ДИАМЕТРОМ ОТ 55 ДО 130 ММ, МОДУЛЕМ ОТ 3 ДО 5 ММ С ЦЕНТРИРОВАНИЕМ ПО НАРУЖНОМУ ДИАМЕТРУ КОМБИНИРОВАННЫЕ ДВУХПРОХОДНЫЕ

## Конструкция

Combined broaches with diameter frome 55 to 130 mm for alitting holes with involute profile with wind round tail and centring at outside diameter with modul frome 3 to 5 mm. Construction

ГОСТ Р 50038—92

ОКП 39 2340

Дата введения 01.01.93

Настоящий стандарт распространяется на комбинированные двухпроходные протяжки универсального назначения с навертным хвостовиком диаметром $D$ от 55 до 130 мм, модулем $m$ от 3 до 5 мм, предназначенные для обработки шлицевых втулок с эвольвентным профилем по ГОСТ 6033 с центрированием по наружному диаметру.

Требования стандарта являются обязательными, кроме требований для справок и рекомендуемых, указанных в чертежах.

1. Конструкция и общие размеры протяжек 1-го прохода должны соответствовать указанным на черт. 1 и в табл. 1;

координаты профиля и контрольные размеры по роликам — табл. 3;

диаметры зубьев — табл. 4;

протяжек 2-го прохода, указанным на черт. 2 и соответственно в табл. 5, 7, 8.

Размеры навертного хвостовика — по ГОСТ 28048.

Изготовление навертного хвостовика производят по взаимной договоренности потребителя с изготовителем.

Допускается по требованию заказчика корректировать размер $M$ (табл. 7) и диаметры чистовых и калибрующих зубьев (табл. 8).

2. Обозначение деталей протяжек 1-го прохода должно соответствовать указанным в табл. 2, 2-го прохода — табл. 6.

3. Размеры протягиваемого отверстия и усилие протягивания должны соответствовать указанным на черт. 3 и в табл. 9.

© Издательство стандартов, 1992

Настоящий стандарт не может быть полностью или частично воспроизведен, тиражирован и распространен без разрешения Госстандарта России

**Протяжки 1-го прохода**

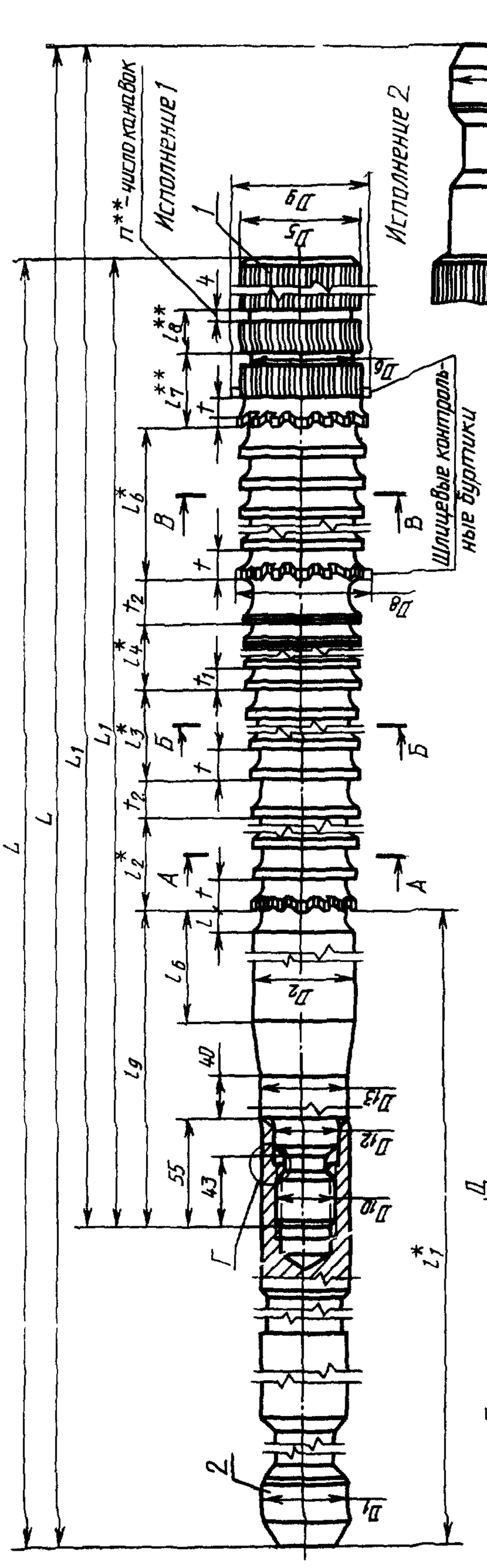


Черт. 1

* Размеры для справок.

** Размеры и параметр — рекомендуемые.

Таблица 1

Размеры, мм

| Обозначение протяжки исполнения | | Применяемость | | $D \times m$ | $z$ | $D_1$ | $D_2$ | $D_3$, не более | $D_4$, не более | $D_5$ | $D_6$ | $D_7$ | $D_8$ | $D_9$ | $D_{10}$ | $D_{11}$ | $D_{12}$ | $D_{13}$ | $L$ для исполнения | | $L_1$ для исполнения | | $l$ | $l_1$ |
|---|---|---|---|---|---|---|---|---|---|---|---|---|---|---|---|---|---|---|---|---|---|---|---|---|
| | | | | | | | | | | | | | | | | | | | 1 | 2 | 1 | 2 | | |
| 1 | 2 | 1 | 2 | | | | | | | | | | | | | | | | | | | | | |
| — | 2403-3569 | | | 70×3 | 22 | 63 | 63,4 | 63,1 | 63,4 | 69,0 | 61 | 50 | 69,6 | — | M48×3 | 43,5 | 50 | 63 | — | 1540 | — | 1325 | 12,0 | 450 |
| — | 2403-3573 | | | 75×3 | 24 | | 68,4 | 68,1 | 68,4 | 74,0 | 66 | | 75,0 | | | | | | | | | | | |
| 2403-3576 | 2403-3579 | | | 80×3 | 25 | | 73,4 | 73,1 | 73,4 | 79,0 | 71 | | 79,4 | | | | | | | | | | | |
| 2403-3583 | 2403-3586 | | | 85×3 | 27 | | 78,4 | 78,1 | 78,4 | 84,0 | 76 | | 84,8 | | | | | | 1490 | 1615 | 1250 | 1375 | | 490 |
| 2403-3589 | 2403-3593 | | | 90×3 | 28 | | 83,4 | 83,1 | 83,4 | 89,0 | 81 | | 89,5 | | | | | | | | | | | |
| 2403-3596 | 2403-3599 | | | 95×3 | 30 | | 88,4 | 88,1 | 88,4 | 94,0 | 86 | | 94,7 | | | | | | | | | | | 465 |
| 2403-3603 | 2403-3606 | | | 100×3 | 32 | | 93,4 | 93,1 | 93,4 | 99,1 | 91 | | 100,0 | | | | | 70 | | 1540 | | 1300 | | |
| 2403-3609 | 2403-3613 | | | 105×3 | 34 | | 98,4 | 98,1 | 98,4 | 104,1 | 96 | | 105,3 | 105,0 | | | | | 1415 | | 1175 | | | |
| 2403-3616 | — | | | 110×3 | 35 | | 103,4 | 103,1 | 103,4 | 109,1 | 101 | | 109,8 | — | | | | | | — | | — | | 470 |
| 2403-3619 | — | | | 120×3 | 38 | 70 | 113,4 | 113,1 | 113,4 | 119,1 | 111 | — | 119,7 | | | | | | | | | | | 465 |
| 2403-3623 | — | | | 130×3 | 42 | | 123,4 | 123,1 | 123,4 | 129,1 | 121 | | 130,2 | 129,8 | | | | | | | | | | |
| 2403-3626 | 2403-3629 | | | 55×3,5 | 14 | 45 | 47,5 | 47,2 | 47,4 | 54,0 | 45 | 36 | 54,8 | — | M30×2 | 27,0 | 32 | 45 | 1450 | 1575 | 1250 | 1375 | 11,0 | 420 |
| 2403-3633 | 2403-3636 | | | 60×3,5 | 16 | 50 | 52,4 | 52,1 | 52,4 | 59,0 | 50 | 50 | 60,0 | | | | | | | | | | | |
| 2403-3639 | 2403-3643 | | | 65×3,5 | 18 | | 57,4 | 57,1 | 57,4 | 63,9 | 55 | | 65,3 | 65,0 | M36×3 | 31,5 | 38 | 50 | | | | | | 415 |
| 2403-3646 | 2403-3649 | | | 70×3,5 | | | 62,4 | 62,1 | 62,4 | 69,0 | 60 | | 70,0 | | | | | | 1475 | 1600 | 1275 | 1400 | | |
| 2403-3653 | 2403-3656 | | | 75×3,5 | 20 | 63 | 67,4 | 67,1 | 67,4 | 74,0 | 65 | | 75,2 | | | | | 63 | | | | | | 440 |
| 2403-3659 | 2403-3663 | | | 80×3,5 | 22 | | 72,4 | 72,1 | 72,4 | 79,0 | 70 | | 80,2 | | | | | | | | 1300 | 1425 | | |
| 2403-3666 | 2403-3669 | | | 85×3,5 | 24 | | 77,4 | 77,1 | 77,4 | 84,0 | 75 | | 84,2 | | | | | | | 1640 | | | | |
| 2403-3673 | 2403-3676 | | | 90×3,5 | | | 82,4 | 82,1 | 82,4 | 89,0 | 80 | | 89,5 | | M48×3 | 43,5 | 50 | 70 | 1515 | | | | | |
| 2403-3679 | 2403-3683 | | | 95×3,5 | 26 | | 87,4 | 87,1 | 87,4 | 94,0 | 85 | | 95,0 | | | | | | | | | 1400 | 12,0 | 460 |
| 2403-3686 | — | | | 100×3,5 | 28 | | 92,4 | 92,1 | 92,4 | 99,0 | 90 | | 99,0 | | | | | | | | | | | |
| 2403-3689 | — | | | 105×3,5 | 29 | | 97,4 | 97,1 | 97,4 | 104,0 | 95 | — | 105,3 | 105,0 | | | | | | — | 1275 | — | | |
| 2403-3693 | — | | | 110×3,5 | 30 | | 102,4 | 102,1 | 102,4 | 109,0 | 100 | | 110,0 | — | | | | | | | | | | |

Размеры, мм

| Обозначение проёжки исполнения | | $l_2$ | $l_3$ | $l_4$ | $l_5$ | $l_6$ | $l_7$ | $l_8$ | $l_9$ | Зубья черновые и переходные и шлицевые калибрующие | | | | Зубья круглые чистовые и калибрующие | | $t_2$ | $b$ (пред. откл. −0,04) | $b_1$ | $\varphi$ (пред. откл +1′) | $q$ | $c$ для исполнения | | $n$ | $a$ | $j$ | $l_{10}$ |
|---|---|---|---|---|---|---|---|---|---|---|---|---|---|---|---|---|---|---|---|---|---|---|---|---|---|---|
| | | | | | | | | | | Число зубьев | | $t$ | Номер профиля | $t_1$ | Номер профиля | | | | | | 1 | 2 | | | | |
| | | | | | | | | | | фасочных | шлицевых | | | | | | | | | | | | | | | |
| 1 | 2 | | | | | | | | | | | | | | | | | | | | | | | | | | |
| — | 2403-3569 | 180 | 72 | 52 | 540 | 95 | 30 | 12 | 235 | 11 | 31 | 18 | 12 | 13 | 8 | 18 | 46,66 | 1,48 | 98°10′ | 6 | — | 0,331 | 5 | 1,5 | 23 | 125 |
| — | 2403-3573 | | | | | | | | | | | | | | | | 53,18 | 1,28 | 105°00′ | 7 | | | | | | |
| 2403-3576 | 2403-3579 | 198 | | | | 110 | 31 | 13 | 250 | 12 | | | | | | | 55,36 | 1,44 | 100°48′ | | 0,312 | 0,344 | 6 | | 25 | |
| 2403-3583 | 2403-3586 | | | | | | | | | | | | | | | | 55,65 | 1,62 | 93°20′ | | | | | | | |
| *2403-3589* | *2403-3593* | | | | | | | | | | | | | | | | 64,05 | 1,40 | 102°52′ | 8 | | | | | | |
| 2403-3596 | 2403-3599 | | | | | | | | | | | | | | | | 64,38 | 1,56 | 96°00′ | | | | | | | |
| 2403-3603 | 2403-3606 | 180 | | | 522 | 95 | 30 | 12 | 225 | 11 | 30 | | | | | | 71,05 | 1,38 | 101°16′ | 9 | 0,294 | 0,325 | 5 | | 24 | — |
| 2403-3609 | 2403-3613 | 198 | | | 504 | | | | | 12 | 29 | | | | | | 71,42 | 1,52 | 95°18′ | | | | | | | |
| 2403-3616 | — | | | | | | | | | | | | | | | | 73,30 | 1,63 | 92°34′ | | | | | | | |
| 2403-3619 | — | 216 | | | 486 | | 32 | 14 | 230 | 13 | 28 | | | | | | 82,08 | 1,60 | 94°44′ | 10 | | — | | | 26 | |
| 2403-3623 | — | 224 | | | 512 | | | | 225 | 15 | 33 | | | | | | 89,13 | 1,55 | 94°18′ | 11 | | | | | | |
| 2403-3626 | 2403-3629 | 192 | 64 | 44 | 624 | 80 | 28 | 12 | 220 | 13 | 40 | 16 | 11 | 7 | 16 | | 35,56 | 2,04 | 102°52′ | 4 | 0,312 | 0,344 | 4 | 2,0 | 28 | 125 |
| 2403-3633 | 2403-3636 | | | | | | | | | | | | | | | | 42,43 | 1,49 | 112°30′ | 5 | | | | | 25 | |
| 2403-3639 | 2403-3643 | 208 | | | 608 | | | | | 14 | 39 | | | | | | 42,41 | 1,97 | 100°00′ | | | | | | | |
| 2403-3646 | 2403-3649 | 224 | | | 624 | | | | 215 | 15 | 40 | | | | | | 46,20 | 2,02 | | | 0,319 | 0,350 | | | 30 | |
| 2403-3653 | 2403-3656 | 187 | 68 | 48 | 663 | 90 | 29 | 12 | 225 | 12 | | 17 | 12 | 8 | 17 | | 53,26 | 1,65 | 108°00′ | 6 | 0,325 | 0,356 | 5 | | 26 | — |
| 2403-3659 | 2403-3663 | 204 | | | 646 | | | | | 13 | 39 | | | | | | 53,14 | 1,96 | 98°10′ | | | | | | 24 | |
| 2403-3666 | 2403-3669 | 198 | 72 | 52 | 612 | 95 | 30 | | 220 | 12 | 35 | 18 | 12 | 13 | 18 | | 59,98 | 1,85 | 105°00′ | 7 | 0,319 | 0,350 | | | 23 | |
| 2403-3673 | 2403-3676 | | | | | | | | | | | | | | | | 64,00 | 1,77 | | | | | | | 26 | |
| 2403-3679 | 2403-3683 | | | | | | | | | | | | | | | | 63,83 | 1,98 | 96°56′ | | | | | | 24 | |
| 2403-3686 | — | | | | | | | | | | | | | | | | 70,81 | 1,84 | 102°52′ | 8 | | — | | | 23 | — |
| 2403-3689 | — | | | | | | | | | | | | | | | | 72,73 | 1,89 | 99°18′ | | | | | | 24 | |
| 2403-3693 | — | | | | | | | | | | | | | | | | 74,49 | 2,00 | 96°00′ | | | | | | 25 | |

*Продолжение табл. 1*

Размеры, мм

| Обозначение проушки исполнения | | Применяемость | | $D \times m$ | z | $D_1$ | $D_2$ | $D_3$, не более | $D_4$, не более | $D_5$ | $D_6$ | $D_7$ | $D_8$ | $D_9$ | $D_{10}$ | $D_{11}$ | $D_{12}$ | $D_{13}$ | $L$ для исполнения | | $L_1$ для исполнения | | $l$ | $l_1$ |
|---|---|---|---|---|---|---|---|---|---|---|---|---|---|---|---|---|---|---|---|---|---|---|---|---|
| 1 | 2 | 1 | 2 | | | | | | | | | | | | | | | | 1 | 2 | 1 | 2 | | |
| 2403-3696 | — | | | 120×3,5 | 34 | 70 | 112,4 | 112,1 | 112,4 | 118,9 | 110 | — | 119,2 | — | M48×3 | 43,5 | 50 | 70 | 1540 | — | 1300 | — | 12,0 | 485 |
| 2403-3699 | — | | | 130×3,5 | 36 | | 122,4 | 122,1 | 122,4 | 129,0 | 120 | | 130,4 | 130,0 | | | | | | | | | 11,0 | 475 |
| — | 2403-3703 | | | 60×4 | 13 | 50 | 51,4 | 51,1 | 51,2 | 58,9 | 49 | 50 | 58,3 | | M36×3 | 31,5 | 38 | 50 | — | 1500 | — | 1325 | 9,5 | 400 |
| 2403-3706 | — | | | | | | | | | | | — | | | | | | | 1525 | — | 1325 | — | 11,0 | 420 |
| — | 2403-3709 | | | 65×4 | 15 | | 56,4 | 56,1 | 56,2 | 63,9 | 54 | 50 | 64,6 | | | | | | — | 1500 | — | 1325 | 9,5 | 400 |
| 2403-3713 | — | | | | | | | | | | | — | | | | | | | 1550 | — | 1350 | — | 11,0 | 420 |
| — | 2403-3716 | | | 70×4 | 16 | | 61,4 | 61,1 | 61,2 | 68,9 | 59 | 50 | 69,3 | | | | | | — | 1500 | — | 1325 | 9,5 | 390 |
| 2403-3719 | — | | | | | | | | | | | — | | | | | | | 1600 | — | 1400 | — | 11,0 | 435 |
| — | 2403-3723 | | | 75×4 | 17 | 63 | 66,4 | 66,1 | 66,2 | 73,9 | 64 | 50 | 74,2 | — | | | | 63 | — | 1515 | — | 1300 | 9,5 | 415 |
| 2403-3726 | — | | | | | | | | | | | — | | | | | | | 1615 | — | 1400 | — | 11,0 | 440 |
| — | 2403-3729 | | | 80×4 | 18 | | 71,4 | 71,1 | 71,2 | 78,9 | 69 | 50 | 79,0 | | | | | | — | 1515 | — | 1300 | 9,5 | 415 |
| 2403-3733 | — | | | | | | | | | | | — | | | | | | | 1615 | — | 1400 | — | 11,0 | 440 |
| — | 2403-3736 | | | 85×4 | 20 | | 76,4 | 76,1 | 76,2 | 83,9 | 74 | 50 | 85,2 | | | | | 70 | — | 1540 | — | 1300 | 9,5 | 435 |
| 2403-3739 | — | | | | | | | | | | | — | | | | | | | 1590 | — | 1350 | — | 12,0 | 455 |
| — | 2403-3743 | | | 90×4 | 21 | | 81,4 | 81,1 | 81,2 | 88,9 | 79 | 50 | 90,0 | | M48×3 | 43,5 | 50 | | — | 1540 | — | 1300 | 9,5 | 435 |
| 2403-3746 | — | | | | | | | | | | | — | | | | | | | 1590 | — | 1350 | — | 12,0 | 455 |
| — | 2403-3749 | | | 95×4 | 22 | | 86,4 | 86,1 | 86,2 | 93,9 | 84 | 50 | 94,6 | | | | | | — | 1540 | — | 1300 | 9,5 | 435 |
| 2403-3753 | — | | | | | | | | | | | — | | | | | | | 1590 | — | 1350 | — | 12,0 | 455 |
| — | 2403-3756 | | | 100×4 | 24 | | 91,4 | 91,1 | 91,2 | 98,9 | 89 | 50 | 100,6 | 100,2 | | | | | — | 1540 | — | 1300 | 9,5 | 435 |
| 2403-3759 | — | | | | | | | | | | | — | | | | | | | 1540 | — | 1300 | — | 12,0 | 455 |
| — | 2403-3763 | | | 105×4 | 25 | | 96,4 | 96,1 | 96,2 | 103,9 | 94 | 50 | 105,4 | 105,0 | | | | | — | 1540 | — | 1300 | 9,5 | 435 |
| 2403-3766 | — | | | | | | | | | | | — | | | | | | | 1540 | — | 1300 | — | 12,0 | 455 |

Размеры, мм

| Обозначение протяжки исполнения | | $l_2$ | $l_3$ | $l_4$ | $l_5$ | $l_6$ | $l_7$ | $l_8$ | $l_9$ | Зубья черновые и переходные и шлицевые калибрующие | | | | Зубья круглые чистовые и калибрующие | | $t_2$ | $b$ (пред. откл. −0,04) | $b_1$ | $\varphi$ (пред. откл. ±1°) | $q$ | $c$ для исполнения | | $n$ | $a$ | $j$ | $l_{10}$ |
|---|---|---|---|---|---|---|---|---|---|---|---|---|---|---|---|---|---|---|---|---|---|---|---|---|---|---|
| | | | | | | | | | | Число зубьев | | $t$ | Номер профиля | $t_2$ | Номер профиля | | | | | | 1 | 2 | | | | |
| 1 | 2 | | | | | | | | | фасочных | шлицевых | | | | | | | | | | | | | | | |
| 2403-3696 | — | 216 | 72 | 52 | 594 | 95 | 30 | 12 | 245 | 13 | 34 | 18 | 12 | 13 | | 18 | 81,39 | 2,07 | 95°18′ | 9 | 0,325 | — | 5 | 2,0 | 24 | |
| 2403-3699 | — | 224 | 64 | | 624 | 80 | 29 | 13 | 235 | 15 | 40 | 16 | 11 | | | 16 | 92,29 | 1,83 | 100°00′ | 10 | | | 4 | | 28 | — |
| — | 2403-3703 | 168 | 56 | | 616 | 70 | 25 | | 225 | | | 14 | 10 | | | 17 | | | | | — | 0,331 | 3 | | | 125 |
| 2403-3706 | — | 192 | 64 | | 704 | 80 | 27 | 11 | 220 | 13 | 45 | 16 | 11 | | | 16 | 40,72 | 2,20 | 110°46′ | | 0,331 | — | 4 | | 31 | — |
| — | 2403-3709 | 168 | 56 | | 616 | 70 | 25 | | 225 | | | 14 | 10 | | | 17 | | | | 4 | — | 0,331 | 2 | | 25 | 125 |
| 2403-3713 | — | 208 | 64 | 44 | 704 | 80 | 29 | 13 | 220 | 14 | | 16 | 11 | 11 | | 16 | 39,95 | 2,48 | 96°00′ | | 0,338 | — | 4 | | 26 | — |
| — | 2403-3716 | 168 | 56 | | 630 | 70 | 24 | 10 | 215 | 13 | 46 | 14 | 10 | | | 17 | | | | | — | 0,331 | 3 | | 27 | 125 |
| 2403-3719 | — | 224 | 64 | | 720 | 80 | 30 | 14 | 235 | 15 | | 16 | 11 | | | 16 | 49,64 | 1,95 | 112°30′ | | 0,350 | — | 4 | | 29 | — |
| — | 2403-3723 | 168 | 56 | | 616 | 70 | 25 | 11 | 200 | 13 | 45 | 14 | 10 | | | 17 | 51,32 | | 105°52′ | 5 | — | 0,325 | 3 | | 27 | 125 |
| 2403-3726 | — | 204 | 68 | 48 | 748 | 90 | 29 | 12 | 225 | | | 17 | 11 | 12 | 8 | | | | | | 0,350 | — | 4 | | | — |
| — | 2403-3729 | 168 | 56 | 44 | 616 | 70 | 25 | 11 | 200 | | | 14 | 10 | 11 | | | 52,78 | 2,50 | 100°00′ | | — | 0,325 | 3 | 2,5 | | 125 |
| 2403-3733 | — | 204 | 68 | 48 | 748 | 90 | 29 | 12 | 225 | | | 17 | 11 | 12 | | | | | | | 0,350 | — | 4 | | | — |
| — | 2403-3736 | 168 | 56 | 44 | 616 | 70 | 27 | 13 | 195 | | | 14 | 10 | 11 | | | 60,27 | 2,09 | 108°00′ | | — | 0,325 | 3 | | 25 | 125 |
| 2403-3739 | — | 198 | 72 | 52 | 702 | 95 | 30 | 12 | 215 | 12 | 40 | 18 | 12 | 13 | | 18 | | | | | 0,338 | — | 4 | | 23 | — |
| — | 2403-3743 | 168 | 56 | 44 | 616 | 70 | 27 | 13 | 195 | 13 | 45 | 14 | 10 | 11 | | 17 | 61,92 | 2,27 | 102°52′ | 6 | — | 0,325 | 3 | | 26 | 125 |
| 2403-3746 | — | 198 | 72 | 52 | 702 | 95 | 30 | 12 | 215 | 12 | 40 | 18 | 12 | 13 | | 18 | | | | | 0,338 | — | 4 | | 24 | — |
| — | 2403-3749 | 168 | 56 | 44 | 616 | 70 | 27 | 13 | 195 | 13 | 45 | 14 | 10 | 11 | | 17 | 63,39 | 2,46 | 98°10′ | | — | 0,325 | 3 | | 26 | 125 |
| 2403-3753 | — | 198 | 72 | 52 | 702 | 95 | 30 | 12 | 215 | 12 | 40 | 18 | 12 | 13 | | 18 | | | | | 0,338 | — | 4 | | 24 | — |
| — | 2403-3756 | 168 | 56 | 44 | 616 | 70 | 27 | | 195 | 13 | 45 | 14 | 10 | 11 | | 17 | 70,88 | 2,22 | 105°00′ | | — | 0,325 | 3 | | 25 | 125 |
| 2403-3759 | — | 180 | 72 | 52 | 666 | 90 | 31 | 13 | 215 | 11 | 38 | 18 | 12 | 13 | | 18 | | | | 7 | 0,325 | | 4 | | 22 | — |
| — | 2403-3763 | 168 | 56 | 44 | 616 | 70 | 27 | | 195 | 13 | 45 | 14 | 10 | 11 | | 17 | 72,50 | 2,32 | 100°48′ | | — | 0,325 | 3 | | 26 | 125 |
| 2403-3766 | — | 180 | 72 | 52 | 666 | 90 | 31 | | 215 | 11 | 38 | 18 | 12 | 13 | | 18 | | | | | 0,325 | — | 4 | | 23 | — |

*Продолжение табл. 1*

Размеры, мм

| Обозначение протяжки исполнения | | Применяемость | | $D \times m$ | z | $D_1$ | $D_2$ | $D_3$, не более | $D_4$, не более | $D_5$ | $D_6$ | $D_7$ | $D_8$ | $D_9$ | $D_{10}$ | $D_{11}$ | $D_{12}$ | $D_{13}$ | $L$ для исполнения | | $L_1$ для исполнения | | $l$ | $l_1$ |
|---|---|---|---|---|---|---|---|---|---|---|---|---|---|---|---|---|---|---|---|---|---|---|---|---|
| 1 | 2 | 1 | 2 | | | | | | | | | | | | | | | | 1 | 2 | 1 | 2 | | |
| — | 2403-3769 | | | 110×4 | 26 | 63 | 101,4 | 101,1 | 101,2 | 108,9 | 99 | 63 | 110,2 | 110,0 | M48×3 | 43,5 | 50 | 70 | — | 1540 | — | 1300 | 9,5 | 425 |
| 2403-3773 | — | | | | | | | | | | | — | | | | | | | 1515 | — | 1275 | — | 12,0 | 440 |
| — | 2403-3776 | | | 120×4 | 28 | 70 | 111,4 | 111,1 | 111,2 | 118,9 | 109 | 63 | 119,8 | — | | | | | — | 1540 | — | 1300 | 9,5 | 435 |
| 2403-3779 | — | | | | | | | | | | | — | | | | | | | 1540 | — | 1300 | — | 12,0 | 465 |
| — | 2403-3783 | | | 130×4 | 31 | | 121,4 | 121,1 | 121,2 | 128,9 | 119 | 63 | 130,5 | 130,2 | | | | | — | 1540 | — | 1300 | 9,5 | 435 |
| 2403-3786 | — | | | | | | | | | | | — | | | | | | | 1540 | | 1300 | | | 455 |
| 2403-3789 | — | | | 70×5 | 12 | 50 | 59,4 | 59,0 | 59,0 | 68,7 | 57 | | 68,4 | | M36×3 | 31,5 | 38 | 50 | 1575 | | | | | 410 |
| 2403-3793 | — | | | 75×5 | 13 | 63 | 64,4 | 64,0 | 64,0 | 73,6 | 62 | | 73,7 | | M48×3 | 43,5 | 50 | 60 | 1590 | | 1375 | | 11,0 | 425 |
| 2403-3796 | — | | | 80×5 | 14 | | 69,4 | 69,0 | 69,0 | 78,6 | 67 | | 79,0 | | | | | | | | | | | |
| 2403-3799 | — | | | 85×5 | 15 | | 74,4 | 74,0 | 74,0 | 83,8 | 72 | | 84,2 | | | | | 70 | 1615 | — | | — | | 440 |
| 2403-3803 | — | | | 90×5 | 16 | | 79,4 | 79,0 | 79,0 | 88,8 | 77 | | 89,3 | | | | | | | | | | | |
| 2403-3806 | — | | | 95×5 | 18 | | 84,4 | 84,0 | 84,0 | 93,8 | 82 | | 93,4 | — | | | | | 1515 | | 1275 | | 9,5 | 415 |
| 2403-3809 | — | | | 100×5 | | | 89,4 | 89,0 | 89,0 | 98,6 | 87 | | 99,7 | | | | | | | | | | | |
| 2403-3813 | — | | | 105×5 | 20 | | 94,4 | 94,0 | 94,0 | 103,6 | 92 | | 103,5 | | | | | | 1540 | | 1300 | | | 440 |
| 2403-3816 | — | | | 110×5 | | | 99,4 | 99,0 | 99,0 | 108,6 | 97 | | 109,5 | | | | | | | | | | | |
| 2403-3819 | — | | | 120×5 | 22 | 70 | 109,4 | 109,0 | 109,0 | 118,6 | 107 | | 120,0 | | | | | | | | | | | |
| 2403-3823 | — | | | 130×5 | 24 | | 119,4 | 119,0 | 119,0 | 128,6 | 117 | | 129,7 | | | | | | | | | | | |

Размеры, мм

| Обозначение протяжки исполнения | | $l_2$ | $l_3$ | $l_4$ | $l_5$ | $l_6$ | $l_7$ | $l_8$ | $l_9$ | Зубья черновые и переходные и шлицевые калибрующие | | | | Зубья круглые чистовые и калибрующие | | $t_2$ | $b$ (пред откл −0,04) | $b_1$ | $\varphi$ (пред откл. ±1°) | $q$ | $c$ для исполнения | | $n$ | $a$ | $j$ | $l_{10}$ |
|---|---|---|---|---|---|---|---|---|---|---|---|---|---|---|---|---|---|---|---|---|---|---|---|---|---|---|
| | | | | | | | | | | Число зубьев | | $t$ | Номер профиля | $t_1$ | Номер профиля | | | | | | 1 | 2 | | | | |
| 1 | 2 | | | | | | | | | фасочных | шлицевых | | | | | | | | | | | | | | | |
| — | 2403-3769 | 168 | 56 | 44 | 574 | 70 | 28 | 14 | 185 | 13 | 42 | 14 | 10 | 11 | 8 | 17 | 73,99 | 2,43 | 96°56′ | 7 | — | 0,325 | 3 | 2,5 | 26 | 175 |
| 2403-3773 | — | 198 | 72 | 52 | 648 | 80 | 32 | | 200 | 12 | 37 | 18 | 12 | 13 | | 18 | | | | | 0,319 | — | | | 24 | — |
| — | 2403-3776 | 154 | 56 | 44 | 588 | 70 | 24 | 10 | 195 | | 43 | 14 | 10 | 11 | | 17 | 85,35 | 2,35 | 102°52′ | 8 | — | 0,325 | | | 26 | 175 |
| 2403-3779 | — | 180 | 72 | 52 | 666 | 80 | 32 | 14 | 225 | 11 | 38 | 18 | 12 | 13 | | 18 | | | | | 0,325 | — | | | 24 | — |
| — | 2403-3783 | 168 | 56 | 44 | 574 | 70 | 24 | 10 | 195 | 13 | 42 | 14 | 10 | 11 | | 17 | 85,95 | 2,55 | 92°54′ | | — | 0,325 | | | 26 | 175 |
| 2403-3786 | — | 204 | 68 | | 663 | 75 | 31 | 14 | 215 | | 40 | 17 | | | | | | | | | 0,325 | | | | | |
| 2403-3789 | — | 192 | | | 768 | | | | | | 49 | | | | | | 49,70 | | 120°00′ | | | | | | | |
| 2403-3793 | — | | | | | | | | 210 | | | | | | | | 50,87 | 2,95 | 110°46′ | 4 | | | | | 42 | |
| 2403-3796 | — | 208 | 64 | | 752 | | | 12 | | 14 | 48 | 16 | 11 | | | 16 | 51,80 | 3,24 | 102°52′ | | 0,344 | | | | | |
| 2403-3799 | — | | | | | | | | | | | | | | | | 52,54 | 3,48 | 96°00′ | | | | | | 41 | |
| 2403-3803 | — | 192 | | 48 | 768 | | | | 200 | 13 | 49 | | | 12 | | | 64,01 | 2,83 | 112°30′ | | | — | 4 | 3,0 | | |
| 2403-3806 | — | 208 | | | 752 | 70 | 28 | | | | 48 | | | | 9 | | 62,24 | 3,12 | 100°00′ | 5 | | | | | 39 | |
| 2403-3809 | — | 182 | 56 | | 728 | | | | | 14 | 53 | | | | | | 65,96 | 3,31 | | | | | | | 43 | |
| 2403-3813 | — | 168 | | | 742 | | | 14 | 175 | 13 | 54 | 14 | 10 | | | 17 | 74,30 | 2,83 | 108°00′ | 6 | 0,319 | | 2 | | 41 | |
| 2403-3816 | — | | | | | | | | | | | | | | | | 78,26 | 2,98 | | | | | | | 44 | |
| 2403-3819 | — | 182 | | | 728 | | | | 200 | 14 | 53 | | | | | | 80,11 | 3,32 | 98°10′ | 7 | 0,325 | | | | 43 | |
| 2403-3823 | — | 168 | | | 742 | | | | | 13 | 54 | | | | | | 92,48 | 3,01 | 105°00′ | | | | | | | |

Пример условного обозначения протяжки длиной $L=1540$ мм для шлицевого эвольвентного отверстия диаметром 130 мм, модулем 5 мм с центрированием по наружному диаметру, группы заточки II, исполнения *1*, 1-го прохода:

*Протяжка 2403-3823 II ГОСТ Р 50038—92*

Таблица 2

| Обозначение протяжки исполнения | | $D \times m$ мм | Поз. 1 | | Поз. 2 |
|---|---|---|---|---|---|
| | | | Протяжка исполнения (кол. 1) | | |
| | | | 2 | 2 | Хвостовик (кол. 1) |
| 1 | 2 | | Обозначение | | |
| — | 2403-3569 | 70×3 | — | 2403-3569/1 | 2403-2245/2 |
| — | 2403-3573 | 75×3 | — | 2403-3573/1 | |
| 2403-3576 | 2403-3579 | 80×3 | 2403-3576/1 | 2403-3579/1 | |
| 2403-3583 | 2403-3586 | 85×3 | 2403-3583/1 | 2403-3586/1 | |
| 2403-3589 | 2403-3593 | 90×3 | 2403-3589/1 | 2403-3593/1 | |
| 2403-3596 | 2403-3599 | 95×3 | 2403-3596/1 | 2403-3599/1 | 2403-2263/2 |
| 2403-3603 | 2403-3606 | 100×3 | 2403-3603/1 | 2403-3606/1 | |
| 2403-3609 | 2403-3613 | 105×3 | 2403-3609/1 | 2403-3613/1 | |
| 2403-3616 | — | 110×3 | 2403-3616/1 | — | |
| 2403-3619 | — | 120×3 | 2403-3619/1 | — | 2403-2476/2 |
| 2403-3623 | — | 130×3 | 2403-3623/1 | — | |
| 2403-3626 | 2403-3629 | 55×3,5 | 2403-3626/1 | 2403-3629/1 | 2403-2205/2 |
| 2403-3633 | 2403-3636 | 60×3,5 | 2403-3633/1 | 2403-3636/1 | |
| 2403-3639 | 2403-3643 | 65×3,5 | 2403-3639/1 | 2403-3643/1 | 2403-2223/2 |
| 2403-3646 | 2403-3649 | 70×3,5 | 2403-3646/1 | 2403-3649/1 | |
| 2403-3653 | 2403-3656 | 75×3,5 | 2403-3653/1 | 2403-3656/1 | 2403-2245/2 |
| 2403-3659 | 2403-3663 | 80×3,5 | 2403-3659/1 | 2403-3663/1 | |
| 2403-3666 | 2403-3669 | 85×3,5 | 2403-3666/1 | 2403-3669/1 | |
| 2403-3673 | 2403-3676 | 90×3,5 | 2403-3673/1 | 2403-3676/1 | 2403-2263/2 |
| 2403-3679 | 2403-3683 | 95×3,5 | 2403-3679/1 | 2403-3683/1 | |
| 2403-3686 | — | 100×3,5 | 2403-3686/1 | — | |
| 2403-3689 | — | 105×3,5 | 2403-3689/1 | — | 2403-2263/2 |
| 2403-3693 | — | 110×3,5 | 2403-3693/1 | — | |
| 2403-3696 | — | 120×3,5 | 2403-3696/1 | — | 2403-2476 2 |
| 2403-3699 | — | 130×3,5 | 2403-3699/1 | — | |
| — | 2403-3703 | 60×4 | — | 2403-3703/1 | 2403-2218/2 |
| 2403-3706 | — | | 2403-3706/1 | — | 2403-2223/2 |
| — | 2403-3709 | 65×4 | — | 2403-3709/1 | 2403-2218/2 |
| 2403-3713 | — | | 2403-3713/1 | — | 2403-2223/2 |
| — | 2403-3716 | 70×4 | — | 2403-3716/1 | 2403-2218/2 |
| 2403-3719 | — | | 2403-3719/1 | — | 2403-2223/2 |
| — | 2403-3723 | 75×4 | — | 2403-3723/1 | 2403-2245/2 |
| 2403-3726 | — | | 2403-3726/1 | — | |
| — | 2403-3729 | 80×4 | — | 2403-3729/1 | |
| 2403-3733 | — | | 2403-3733/1 | — | |
| — | 2403-3736 | 85×4 | — | 2403-3736/1 | 2403-2263/2 |
| 2403-3739 | — | | 2403-3739/1 | — | |
| — | 2403-3743 | 90×4 | — | 2403-3743/1 | |
| 2403-3746 | — | | 2403-3746/1 | — | |

*Продолжение табл. 2*

| Обозначение протяжки исполнения | | $D \times m$ мм | Поз. 1 | | Поз. 2 |
|---|---|---|---|---|---|
| | | | Протяжка исполнения (кол. 1) | | Хвостовик (кол. 1) |
| 1 | 2 | | 1 | 2 | |
| | | | Обозначение | | |
| — | 2403-3749 | 95×4 | — | 2403-3749/1 | 2403-2263/2 |
| 2403-3753 | — | | 2403-3753/1 | — | |
| — | 2403-3756 | 100×4 | — | 2403-3756/1 | |
| 2403-3759 | — | | 2403-3759/1 | — | |
| — | 2403-3763 | 105×4 | — | 2403-3763/1 | |
| 2403-3766 | — | | 2403-3766/1 | — | |
| — | 2403-3769 | 110×4 | — | 2403-3769/1 | |
| 2403-3773 | — | | 2403-3773/1 | — | |
| — | 2403-3776 | 120×4 | — | 2403-3776/1 | 2403-2476/2 |
| 2403-3779 | — | | 2403-3779/1 | — | |
| — | 2403-3783 | 130×4 | — | 2403-3783/1 | |
| 2403-3786 | — | | 2403-3786/1 | — | |
| 2403-3789 | — | 70×5 | 2403-3789/1 | — | 2403-2223/2 |
| 2403-3793 | — | 75×5 | 2403-3793/1 | — | 2403-2245/2 |
| 2403-3796 | — | 80×5 | 2403-3796/1 | — | |
| 2403-3799 | — | 85×5 | 2403-3799/1 | — | 2403-2263/2 |
| 2403-3803 | — | 90×5 | 2403-3803/1 | — | |
| 2403-3806 | — | 95×5 | 2403-3806/1 | — | |
| 2403-3809 | — | 100×5 | 2403-3809/1 | — | |
| 2403-3813 | — | 105×5 | 2403-3813/1 | — | |
| 2403-3816 | — | 110×5 | 2403-3816/1 | — | |
| 2403-3819 | — | 120×5 | 2403-3819/1 | — | 2403-2476/2 |
| 2403-3823 | — | 130×5 | 2403-3823/1 | — | |

Таблица 3

Размеры, мм

| Обозначение протяжки | $D \times m$ | $x_1$ | $x_2$ | $x_3$ | $y_1$ | $y_2$ | $y_3$ | $x_0$ | $y_0$ | $R$ | $d_p$ | $M$ | | |
|---|---|---|---|---|---|---|---|---|---|---|---|---|---|---|
| | | | | | | | | | | | | на переднем контрольном буртике | на последнем калибрующем зубе | на заднем контрольном буртике |
| 2403-3569 | 70×3 | 2,118 | 2,890 | 3,701 | 32,392 | 33,592 | 34,670 | 18,030 | 23,005 | 18,475 | 7,000 | 78,134 | 77,864 | — |
| | | | | | | | | | | | 8,690 | 82,675 | 82,405 | — |
| 2403-3573 | 75×3 | 2,104 | 2,829 | 3,593 | 34,876 | 36,083 | 37,170 | 18,782 | 25,684 | 19,043 | 7,000 | 83,303 | 83,033 | — |
| | | | | | | | | | | | 8,690 | 87,932 | 87,662 | — |
| 2403-3576<br>2403-3579 | 80×3 | 2,131 | 2,929 | 3,753 | 37,388 | 38,592 | 39,676 | 20,669 | 25,968 | 21,773 | 7,000 | 87,863 | 87,593 | — |
| | | | | | | | | | | | 8,690 | 92,394 | 92,124 | — |
| 2403-3583<br>2403-3586 | 85×3 | 2,128 | 2,886 | 3,669 | 39,910 | 41,120 | 42,211 | 21,523 | 28,589 | 22,458 | 7,000 | 93,054 | 92,784 | — |
| | | | | | | | | | | | 8,690 | 97,664 | 97,394 | — |
| 2403-3589<br>2403-3593 | 90×3 | 2,157 | 2,976 | 3,807 | 42,392 | 43,599 | 44,688 | 23,330 | 28,914 | 25,099 | 7,000 | 97,909 | 97,639 | — |
| | | | | | | | | | | | 8,690 | 102,442 | 102,172 | — |
| 2403-3596<br>2403-3599 | 95×3 | 2,144 | 2,927 | 3,721 | 44,914 | 46,126 | 47,222 | 24,214 | 31,524 | 25,814 | 7,000 | 103,095 | 102,825 | — |
| | | | | | | | | | | | 8,690 | 107,698 | 107,428 | — |
| 2403-3603<br>2403-3606 | 100×3 | 2,122 | 2,869 | 3,701 | 47,402 | 48,618 | 49,818 | 25,032 | 34,157 | 26,462 | 7,000 | 108,248 | 107,987 | — |
| | | | | | | | | | | | 8,690 | 112,921 | 112,660 | — |
| 2403-3609<br>2403-3613 | 105×3 | 2,124 | 2,841 | 3,570 | 49,918 | 51,137 | 52,243 | 25,740 | 36,834 | 26,999 | 7,000 | 113,387 | — | 113,126 |
| | | | | | | | | | | | 8,690 | 118,129 | — | 117,868 |
| 2403-3616 | 110×3 | 2,140 | 2,909 | 3,681 | 52,419 | 53,637 | 54,741 | 27,665 | 37,135 | 29,752 | 7,000 | 118,054 | 117,802 | — |
| | | | | | | | | | | | 8,690 | 122,707 | 122,455 | — |
| 2403-3619 | 120×3 | 2,159 | 2,946 | 3,728 | 57,422 | 58,641 | 59,746 | 30,377 | 40,059 | 33,132 | 7,000 | 128,063 | 127,819 | — |
| | | | | | | | | | | | 8,690 | 132,705 | 132,462 | — |
| 2403-3623 | 130×3 | 2,130 | 2,865 | 3,596 | 62,425 | 63,648 | 64,761 | 31,984 | 45,318 | 34,408 | 7,000 | 138,332 | — | 138,068 |
| | | | | | | | | | | | 8,690 | 143,090 | — | 142,826 |
| 2403-3626<br>2403-3629 | 55×3,5 | 2,424 | 3,479 | 4,752 | 24,387 | 25,767 | 27,082 | 15,112 | 15,778 | 15,333 | 8,690 | 65,454 | 65,142 | — |
| | | | | | | | | | | | 12,423 | 74,690 | 74,378 | — |
| 2403-3633<br>2403-3636 | 60×3,5 | 2,366 | 3,274 | 4,384 | 26,874 | 28,281 | 29,640 | 15,637 | 19,308 | 15,277 | 8,690 | 71,013 | 70,701 | — |
| | | | | | | | | | | | 10,950 | 76,851 | 76,539 | — |
| 2403-3639<br>2403-3643 | 65×3,5 | 2,418 | 3,210 | 4,112 | 29,417 | 30,839 | 32,120 | 15,946 | 22,818 | 15,051 | 8,282 | 75,278 | — | 74,966 |
| | | | | | | | | | | | 10,353 | 80,879 | — | 80,567 |
| 2403-3646<br>2403-3649 | 70×3,5 | 2,470 | 3,527 | 4,653 | 31,920 | 33,321 | 34,572 | 18,879 | 20,639 | 19,913 | 8,690 | 80,433 | 80,120 | — |
| | | | | | | | | | | | 12,423 | 89,815 | 89,503 | — |
| 2403-3653<br>2403-3656 | 75×3,5 | 2,389 | 3,330 | 4,430 | 34,400 | 35,818 | 37,200 | 19,477 | 24,090 | 19,957 | 8,282 | 84,843 | 84,511 | — |
| | | | | | | | | | | | 10,353 | 90,304 | 89,972 | — |
| 2403-3659<br>2403-3663 | 80×3,5 | 2,403 | 3,249 | 4,166 | 36,933 | 38,362 | 39,656 | 19,869 | 27,560 | 19,821 | 8,282 | 90,192 | 89,869 | — |
| | | | | | | | | | | | 10,353 | 95,813 | 95,490 | — |
| 2403-3666<br>2403-3669 | 85×3,5 | 2,438 | 3,194 | 4,099 | 39,415 | 40,853 | 43,268 | 20,083 | 31,049 | 19,528 | 7,000 | 91,631 | 91,325 | — |
| | | | | | | | | | | | 8,690 | 96,601 | 96,295 | — |
| 2403-3673<br>2403-3676 | 90×3,5 | 2,419 | 3,380 | 4,473 | 41,919 | 43,346 | 44,744 | 23,300 | 28,891 | 24,612 | 8,282 | 99,758 | 99,452 | — |
| | | | | | | | | | | | 01,353 | 105,254 | 104,948 | — |

*Продолжение табл 3*

Размеры, мм

| Обозначение протяжки | $D \times m$ | $x_1$ | $x_2$ | $x_3$ | $y_1$ | $y_2$ | $y_3$ | $x_0$ | $y_0$ | $R$ | $d_p$ | $M$ | | |
|---|---|---|---|---|---|---|---|---|---|---|---|---|---|---|
| | | | | | | | | | | | | на переднем контрольно буртике | на последнем калибрующем зубе | на заднем контрольном буртике |
| 2403-3679 | 95×3,5 | 2,411 | 3,293 | 4,220 | 44,452 | 45,888 | 47,191 | 23,732 | 32,344 | 24,519 | 8,282 | 105,108 | 104,802 | — |
| 2403-3683 | | | | | | | | | | | 10,353 | 110,742 | 110,436 | — |
| 2403-3686 | 100×3,5 | 2,416 | 3,222 | 4,150 | 46,935 | 48,377 | 49,799 | 24,053 | 35,790 | 24,339 | 7,000 | 106,613 | 106,307 | — |
| | | | | | | | | | | | 8,690 | 111,525 | 111,219 | — |
| 2403-3689 | 105×3,5 | 2,403 | 3,262 | 4,156 | 49,447 | 50,889 | 52,201 | 25,809 | 36,481 | 26,757 | 8,282 | 115,064 | — | 114,759 |
| | | | | | | | | | | | 10,353 | 120,765 | — | 120,460 |
| 2403-3693 | 110×3,5 | 2,417 | 3,323 | 4,255 | 51,959 | 53,399 | 54,711 | 27,561 | 37,151 | 29,181 | 8,282 | 120,039 | 119,733 | — |
| | | | | | | | | | | | 10,353 | 125,682 | 125,376 | — |
| 2403-3696 | 120×3,5 | 2,441 | 3,223 | 4,035 | 56,962 | 58,411 | 59,736 | 28,158 | 44,030 | 28,786 | 7,000 | 126,651 | 126,354 | — |
| | | | | | | | | | | | 8,690 | 131,666 | 131,369 | — |
| 2403-3699 | 130×3,5 | 2,408 | 3,274 | 4,155 | 61,956 | 63,405 | 64,728 | 31,762 | 45,397 | 33,702 | 8,282 | 140,223 | — | 139,903 |
| | | | | | | | | | | | 10,353 | 145,989 | — | 145,669 |
| 2403-3703 | 60×4 | 2,808 | 4,075 | 5,591 | 26,400 | 27,925 | 29,365 | 16,725 | 16,123 | 17,301 | 10,353 | 72,178 | 71,872 | — |
| | | | | | | | | | | | 12,423 | 77,244 | 76,938 | — |
| 2403-3706 | | 2,805 | 4,141 | 5,627 | 26,396 | 27,992 | 29,390 | 16,740 | 16,087 | 17,334 | 10,353 | 72,172 | 71,823 | — |
| | | | | | | | | | | | 12,423 | 77,236 | 76,887 | — |
| 2403-3709 | 65×4 | 2,735 | 3,787 | 5,074 | 28,966 | 30,528 | 32,032 | 17,193 | 20,358 | 16,827 | 10,353 | 78,159 | 77,853 | — |
| | | | | | | | | | | | 12,423 | 83,419 | 83,113 | — |
| 2403-3713 | | | 3,758 | 5,004 | | 30,487 | 31,953 | 17,101 | 20,405 | 16,724 | 10,353 | 78,152 | 77,802 | — |
| | | | | | | | | | | | 12,423 | 83,409 | 83,059 | — |
| 2403-3716 | 70×4 | 2,713 | 3,881 | 5,202 | 31,405 | 33,066 | 34,572 | 18,664 | 21,432 | 18,812 | 10,353 | 83,356 | 83,041 | — |
| | | | | | | | | | | | 12,423 | 88,623 | 88,308 | — |
| 2403-3719 | | | 3,866 | 5,149 | | 33,044 | 34,512 | 18,594 | 21,461 | 18,738 | 10,353 | 83,353 | 82,993 | — |
| | | | | | | | | | | | 12,423 | 88,616 | 88,256 | — |
| 2403-3723 | 75×4 | 2,762 | 3,902 | 5,240 | 33,938 | 35,503 | 37,016 | 20,064 | 22,545 | 20,716 | 10,353 | 87,843 | 87,537 | — |
| | | | | | | | | | | | 12,423 | 93,085 | 92,778 | — |
| 2403-3726 | | | 3,964 | 5,276 | | 35,578 | 37,048 | 20,082 | 22,507 | 20,752 | 10,353 | 87,837 | 87,465 | — |
| | | | | | | | | | | | 12,423 | 93,077 | 92,705 | — |
| 2403-3729 | 80×4 | 2,815 | 3,993 | 5,358 | 36,460 | 38,026 | 39,542 | 21,527 | 23,608 | 22,701 | 10,353 | 92,994 | 92,686 | — |
| | | | | | | | | | | | 12,423 | 98,239 | 97,931 | — |
| 2403-3733 | | | 4,057 | 5,394 | | 38,101 | 39,573 | 21,539 | 23,571 | 22,731 | 10,353 | 92,986 | 92,612 | — |
| | | | | | | | | | | | 12,423 | 98,230 | 97,856 | — |
| 2403-3736 | 85×4 | 2,719 | 3,735 | 4,929 | 38,941 | 40,529 | 42,078 | 21,731 | 27,896 | 21,988 | 10,353 | 98,745 | 98,437 | — |
| | | | | | | | | | | | 12,423 | 104,158 | 103,851 | — |
| 2403-3739 | | | 3,790 | 4,961 | | 40,605 | 42,111 | 21,756 | 27,856 | 22,029 | 10,353 | 98,734 | 98,383 | — |
| | | | | | | | | | | | 12,423 | 104,147 | 103,796 | — |
| 2403-3743 | 90×4 | 2,748 | 3,806 | 5,031 | 41,469 | 43,056 | 44,607 | 23,312 | 28,910 | 24,095 | 10,353 | 103,318 | 103,010 | — |
| | | | | | | | | | | | 12,423 | 108,705 | 108,398 | — |
| 2403-3746 | | | 3,864 | 5,064 | | 43,132 | 44,639 | 23,282 | 28,904 | 24,073 | 10,353 | 103,318 | 102,963 | — |
| | | | | | | | | | | | 12,423 | 108,697 | 108,347 | — |

*Продолжение табл. 3*

Размеры, мм

| Обозначение протяжки | $D \times m$ | $x_1$ | $x_2$ | $x_3$ | $y_1$ | $y_2$ | $y_3$ | $x_0$ | $y_0$ | $R$ | $d_p$ | $M$ | | |
|---|---|---|---|---|---|---|---|---|---|---|---|---|---|---|
| | | | | | | | | | | | | на переднем контрольном буртике | на последнем калибрующем зубе | на заднем контрольном буртике |
| 2403-3749 | 95×4 | 2,782 | 3,876 | 5,128 | 43,986 | 45,573 | 47,125 | 24,768 | 30,003 | 26,056 | 10,353 | 108,412 | 108,104 | — |
| | | | | | | | | | | | 12,423 | 113,792 | 113,484 | — |
| 2403-3753 | | | 3,935 | 5,161 | | 45,649 | 47,158 | 24,784 | 29,963 | 26,091 | 10,353 | 108,405 | 108,054 | — |
| | | | | | | | | | | | 12,423 | 113,783 | 113,432 | — |
| 2403-3756 | 100×4 | 2,733 | 3,696 | 4,811 | 46,466 | 48,068 | 49,641 | 24,825 | 34,271 | 25,235 | 10,353 | 114,028 | — | 113,713 |
| | | | | | | | | | | | 12,423 | 119,571 | — | 119,256 |
| 2403-3759 | | | 3,748 | 4,840 | | 48,145 | 49,674 | 24,836 | 34,239 | 25,260 | 10,353 | 114,019 | — | 113,677 |
| | | | | | | | | | | | 12,423 | 119,560 | — | 119,218 |
| 2403-3763 | 105×4 | 2,744 | 3,745 | 4,889 | 48,984 | 50,585 | 52,159 | 26,381 | 35,327 | 27,299 | 10,353 | 118,672 | — | 118,358 |
| | | | | | | | | | | | 12,423 | 124,185 | — | 123,870 |
| 2403-3766 | | | 3,798 | 4,919 | | 50,662 | 52,192 | 26,389 | 35,295 | 27,322 | 10,353 | 118,663 | — | 118,322 |
| | | | | | | | | | | | 12,423 | 124,173 | — | 123,832 |
| 2403-3769 | 110×4 | 2,757 | 3,791 | 4,961 | 51,496 | 53,098 | 54,672 | 27,895 | 36,403 | 29,321 | 10,353 | 123,752 | — | 123,458 |
| | | | | | | | | | | | 12,423 | 129,248 | — | 128,954 |
| 2403-3773 | | | 3,846 | 4,992 | | 53,174 | 54,705 | 27,917 | 36,358 | 29,363 | 10,353 | 123,743 | — | 123,410 |
| | | | | | | | | | | | 12,423 | 129,237 | — | 128,904 |
| 2403-3776 | 120×4 | 2,789 | 3,878 | 5,090 | 56,480 | 58,082 | 59,658 | 30,861 | 38,580 | 33,293 | 10,353 | 133,447 | 133,153 | — |
| | | | | | | | | | | | 12,423 | 138,906 | 138,612 | — |
| 2403-3779 | | | 3,935 | 5,122 | | 58,159 | 59,691 | 30,820 | 38,575 | 33,261 | 10,353 | 133,442 | 133,109 | — |
| | | | | | | | | | | | 12,423 | 138,898 | 138,565 | — |
| 2403-3783 | 130×4 | 2,772 | 3,790 | 4,923 | 61,524 | 63,135 | 64,724 | 32,550 | 43,831 | 34,638 | 10,353 | 143,700 | — | 143,406 |
| | | | | | | | | | | | 12,423 | 149,272 | — | 148,979 |
| 2403-3786 | | | 3,844 | 4,952 | | 63,212 | 64,758 | 32,527 | 43,813 | 34,628 | 10,353 | 143,692 | — | 143,353 |
| | | | | | | | | | | | 12,423 | 149,261 | — | 148,922 |
| 2403-3789 | 70×5 | 3,461 | 5,208 | 7,215 | 30,411 | 32,438 | 34,223 | 19,627 | 18,244 | 20,233 | 13,133 | 86,118 | 85,734 | — |
| | | | | | | | | | | | 17,362 | 96,314 | 95,930 | — |
| 2403-3793 | 75×5 | 3,489 | 5,101 | 7,039 | 32.965 | 34,897 | 36,720 | 20,782 | 20,171 | 21,511 | 13,133 | 90,666 | 90,293 | — |
| | | | | | | | | | | | 17,362 | 100,894 | 100,520 | — |
| 2403-3796 | 80×5 | 3,509 | 5,098 | 6,990 | 35,508 | 37,453 | 39,300 | 22,020 | 22,014 | 22,907 | 13,133 | 96,342 | 95,966 | — |
| | | | | | | | | | | | 17,362 | 106,685 | 106,309 | — |
| 2403-3799 | 85×5 | 3,540 | 5,110 | 6,964 | 38,064 | 40,019 | 41,887 | 23,268 | 23,841 | 24,320 | 13,133 | 100,958 | 100,584 | — |
| | | | | | | | | | | | 17,362 | 111,333 | 110,959 | — |
| 2403-3803 | 90×5 | 3,468 | 5,099 | 6,916 | 40,476 | 42,560 | 44,445 | 24,420 | 25,757 | 25,606 | 13,133 | 106,537 | 106,153 | — |
| | | | | | | | | | | | 17,362 | 117,010 | 116,626 | — |
| 2403-3806 | 95×5 | 3,414 | 4,662 | 6,171 | 43,072 | 45,078 | 47,027 | 24,045 | 31,632 | 23,590 | 10,353 | 105,200 | 104,824 | — |
| | | | | | | | | | | | 13,133 | 112,799 | 112,423 | — |
| 2403-3809 | 100×5 | 3,520 | 5,025 | 6,771 | 45,570 | 47,554 | 49,472 | 26,776 | 29,501 | 28,267 | 13,133 | 116,696 | 116,332 | — |
| | | | | | | | | | | | 17,362 | 127,283 | 126,919 | — |

*Продолжение табл. 3*

Размеры, мм

| Обозначение протяжки | $D \times m$ | $x_1$ | $x_2$ | $x_3$ | $y_1$ | $y_2$ | $y_3$ | $x_0$ | $y_0$ | $R$ | $d_p$ | $M$ | | |
|---|---|---|---|---|---|---|---|---|---|---|---|---|---|---|
| | | | | | | | | | | | | на переднем контрольном буртике | на последнем калибрующем зубе | на заднем контрольном буртике |
| 2403-3813 | 105×5 | 3,393 | 4,628 | 6,100 | 48,033 | 50,049 | 52,018 | 26,259 | 35,408 | 26,119 | 10,353 | 115,221 | 114,850 | — |
| | | | | | | | | | | | 13,133 | 122,875 | 122,504 | — |
| 2403-3816 | 110×5 | 3,482 | 4,950 | 6,637 | 50,532 | 52,531 | 54,474 | 29,042 | 33,309 | 30,821 | 13,133 | 126,842 | 126,471 | — |
| | | | | | | | | | | | 16,565 | 135,553 | 135,182 | — |
| 2403-3819 | 120×5 | 3,506 | 4,953 | 6,601 | 55,589 | 57,597 | 59,557 | 31,419 | 37,012 | 33,529 | 13,133 | 136,977 | 136,613 | — |
| | | | | | | | | | | | 16,565 | 145,764 | 145,400 | — |
| 2403-3823 | 130×5 | 3,465 | 4,885 | 6,491 | 60,547 | 62,566 | 64,541 | 33,660 | 40,815 | 36,071 | 12,423 | 145,231 | 144,860 | — |
| | | | | | | | | | | | 16,000 | 154,524 | 154,153 | — |

Примечания:

1. Число круглых зубьев: черновых — 4, чистовых и калибрующих — 5.

2. $C$ (см. табл. 1 и 5) — величина подъема заднего центра на длине $L_1$ при шлифовании фасонным кругом боковых поверхностей фасочных и шлицевых зубьев.

3. Полный размер фаски $F$ — на калибрующих зубьях.

4. Размер $b$ относится к последнему фасочному зубу.

5. Размеры профиля (глубина и радиусы) зубьев с шагом $t_2$ одинаковы с размерами профиля зубьев с шагом $t$.

6. Номер последнего зуба со стружкоделительной канавкой $j$. Канавки выполнять на фасочных и шлицевых зубьях, располагая их в шахматном порядке.

7 Диаметры роликов $d_p$ (см. табл. 3, 7 и 9) для контроля профиля соответствуют ГОСТ 2475.

8. После контроля профиля зубьев протяжки контрольные буртики сошлифовать до соответствующего окончательного диаметра направляющей или зуба. При этом допускается увеличение ширины задней поверхности этого зуба.

В протяжках 2-го прохода после контроля профиля зубьев профиль передней направляющей прошлифовать до окончательного размера.

9. Допускается изготовление протяжек без стружкоделительных канавок на фасочных зубьях.

10. Размеры $M$ (см. табл. 7) относятся к протяжкам с профилем зубьев, выполненным по заменяющей дуге окружности.

11. Допускается выполнение резьбы протяжки без зарезьбовой канавки с соответствующим увеличением ширины центрирующего пояска хвостовика.

Размеры, мм

Таблица 4

| Обозначение протяжки | | | 2403-3569 | 2403-3573 | 2403-3576<br>2403-3579 | 2403-3583<br>2403-3586 | 2403-3589<br>2403-3593 | 2403-3596<br>2403-3599 | 2403-3603<br>2403-3606 | 2403-3609<br>2403-3613 | 2403-3616 | 2403-3619 | 2403-3623 | 2403-3626<br>2403-3629 |
|---|---|---|---|---|---|---|---|---|---|---|---|---|---|---|
| $D \times m$ | | | 70×3 | 75×3 | 80×3 | 85×3 | 90×3 | 95×3 | 100×3 | 105×3 | 110×3 | 120×3 | 130×3 | 55×3,5 |
| Номера и диаметры $D$, зубьев | | 1 | 63,40 | 68,40 | 73,40 | 78,40 | 83,40 | 88,40 | 93,40 | 98,40 | 103,40 | 113,40 | 123,40 | 47,50 |
| | | 2 | 63,56 | 68,56 | 73,55 | 78,55 | 83,55 | 88,55 | 93,56 | 98,56 | 103,56 | 113,54 | 123,52 | 47,63 |
| | | 3 | 63,72 | 68,72 | 73,70 | 78,70 | 83,70 | 88,70 | 93,72 | 98,72 | 103,72 | 113,68 | 123,64 | 47,76 |
| | | 4 | 63,88 | 68,88 | 73,85 | 78,85 | 83,85 | 88,85 | 93,88 | 98,88 | 103,88 | 113,82 | 123,76 | 47,89 |
| | | 5 | 64,04 | 69,04 | 74,00 | 79,00 | 84,00 | 89,00 | 94,04 | 99,04 | 104,04 | 113,96 | 123,88 | 48,02 |
| | | 6 | 64,20 | 69,20 | 74,15 | 79,15 | 84,15 | 89,15 | 94,20 | 99,20 | 104,20 | 114,10 | 124,00 | 48,15 |
| | | 7 | 64,36 | 69,36 | 74,30 | 79,30 | 84,30 | 89,30 | 94,36 | 99,36 | 104,36 | 114,24 | 124,12 | 48,28 |
| | | 8 | 64,52 | 69,52 | 74,45 | 79,45 | 84,45 | 89,45 | 94,52 | 99,52 | 104,52 | 114,38 | 124,24 | 48,41 |
| | | 9 | 64,68 | 69,68 | 74,60 | 79,60 | 84,60 | 89,60 | 94,68 | 99,68 | 104,68 | 114,52 | 124,36 | 48,54 |
| | | 10 | 64,84 | 69,84 | 74,75 | 79,75 | 84,75 | 89,75 | 94,84 | 99,84 | 104,84 | 114,66 | 124,48 | 48,67 |
| | | 11 | 65,00 | 70,00 | 74,90 | 79,90 | 84,90 | 89,90 | 95,00 | 100,00 | 105,00 | 114,80 | 124,60 | 48,80 |
| | | 12 | 63,58 | 68,58 | 75,05 | 80,05 | 85,05 | 90,05 | 93,61 | 100,16 | 105,16 | 114,94 | 124,72 | 48,93 |
| | | 13 | 63,74 | 68,74 | 73,61 | 78,61 | 83,61 | 88,61 | 93,77 | 98,61 | 103,61 | 115,08 | 124,84 | 49,06 |
| | | 14 | 63,90 | 68,90 | 73,76 | 78,76 | 83,77 | 88,77 | 93,93 | 98,77 | 103,77 | 113,56 | 124,96 | 47,67 |
| | | 15 | 64,06 | 69,06 | 73,91 | 78,91 | 83,93 | 88,93 | 94,09 | 98,93 | 103,93 | 113,74 | 125,08 | 47,80 |
| | | 16 | 64,13 | 69,13 | 74,06 | 79,06 | 84,09 | 89,09 | 94,16 | 99,09 | 104,09 | 113,92 | 123,63 | 47,93 |
| | | 17 | 64,16 | 69,16 | 74,13 | 79,13 | 84,16 | 89,16 | 94,19 | 99,16 | 104,16 | 114,10 | 123,79 | 48,06 |
| | | 18 | 64,16 | 69,16 | 74,16 | 79,16 | 84,19 | 89,19 | 94,19 | 99,19 | 104,19 | 114,16 | 123,95 | 48,11 |
| | | 19 | | | 74,16 | 79,16 | 84,19 | 89,19 | | 99,19 | 104,19 | 114,19 | 124,11 | 48,14 |
| | | 20 | | | | | | | | | | 114,19 | 124,18 | 48,14 |
| | | 21 | 65,16 | 70,16 | | | | | 95,17 | | | | 124,21 | |
| | | 22 | 65,32 | 70,32 | 75,21 | 80,21 | 85,21 | 90,21 | 95,34 | 100,33 | 105,33 | | 124,21 | |
| | | 23 | 65,48 | 70,48 | 75,37 | 80,37 | 85,37 | 90,37 | 95,51 | 100,50 | 105,50 | 115,26 | | 49,21 |
| | | 24 | 65,64 | 70,64 | 75,53 | 80,53 | 85,53 | 90,53 | 95,68 | 100,67 | 105,67 | 115,44 | | 49,36 |
| | | 25 | 65,80 | 70,80 | 75,69 | 80,69 | 85,69 | 90,69 | 95,85 | 100,84 | 105,84 | 115,62 | 125,23 | 49,51 |
| | | 26 | 65,96 | 70,96 | 75,85 | 80,85 | 85,85 | 90,85 | 96,02 | 101,01 | 106,01 | 115,80 | 125,38 | 49,66 |
| | | 27 | 66,12 | 71,12 | 76,01 | 81,01 | 86,01 | 91,01 | 96,19 | 101,18 | 106,18 | 115,98 | 125,53 | 49,81 |
| | | 28 | 66,28 | 71,28 | 76,17 | 81,17 | 86,17 | 91,17 | 96,36 | 101,35 | 106,35 | 116,16 | 125,68 | 49,96 |
| | | 29 | 66,44 | 71,44 | 76,33 | 81,33 | 86,33 | 91,33 | 96,53 | 101,52 | 106,52 | 116,34 | 125,83 | 50,11 |
| | | 30 | 66,60 | 71,60 | 76,49 | 81,49 | 86,49 | 91,49 | 96,70 | 101,69 | 106,69 | 116,52 | 125,98 | 50,26 |
| | | 31 | 66,76 | 71,76 | 76,65 | 81,65 | 86,65 | 91,65 | 96,87 | 101,86 | 106,86 | 116,70 | 126,13 | 50,41 |

Номера и диаметры $D$, зубьев: фасочных; круглых; шлицевых; черновых и переходных; чистовых; калибрующих; черновых

Размеры, мм

*Продолжение табл. 4*

| Обозначение протяжки | | | 2403-3569 | 2403-3573 | 2403-3576<br>2403-3579 | 2403-3583<br>2403-3586 | 2403-3589<br>2403-3593 | 2403-3596<br>2403-3599 | 2403-3603<br>2403-3606 | 2403-3609<br>2403-3613 | 2403-3616 | 2403-3619 | 2403-3623 | 2403-3626<br>2403-3629 |
|---|---|---|---|---|---|---|---|---|---|---|---|---|---|---|
| $D \times m$ | | | 70×3 | 75×3 | 80×3 | 85×3 | 90×3 | 95×3 | 100×3 | 105×3 | 110×3 | 120×3 | 130×3 | 55×3,5 |
| Номера и диаметры $D_1$ зубьев шлицевых | черновых | 32 | 66,92 | 71,92 | 76,81 | 81,81 | 86,81 | 91,81 | 97,04 | 102,03 | 107,03 | 116,88 | 126,28 | 50,56 |
| | | 33 | 67,08 | 72,08 | 76,97 | 81,97 | 86,97 | 91,97 | 97,21 | 102,20 | 107,20 | 117,06 | 126,43 | 50,71 |
| | | 34 | 67,24 | 72,24 | 77,13 | 82,13 | 87,13 | 92,13 | 97,38 | 102,37 | 107,37 | 117,24 | 126,58 | 50,86 |
| | | 35 | 67,40 | 72,40 | 77,29 | 82,29 | 87,29 | 92,29 | 97,55 | 102,54 | 107,54 | 117,42 | 126,73 | 51,01 |
| | | 36 | 67,56 | 72,56 | 77,45 | 82,45 | 87,45 | 92,45 | 97,72 | 102,71 | 107,71 | 117,60 | 126,88 | 51,16 |
| | | 37 | 67,72 | 72,72 | 77,61 | 82,61 | 87,61 | 92,61 | 97,89 | 102,88 | 107,88 | 117,78 | 127,03 | 51,31 |
| | | 38 | 67,88 | 72,88 | 77,77 | 82,77 | 87,77 | 92,77 | 98,06 | 103,05 | 108,05 | 117,96 | 127,18 | 51,46 |
| | | 39 | 68,04 | 73,04 | 77,93 | 82,93 | 87,93 | 92,93 | 98,23 | 103,22 | 108,22 | 118,14 | 127,33 | 51,61 |
| | | 40 | 68,20 | 73,20 | 78,09 | 83,09 | 88,09 | 93,09 | 98,40 | 103,39 | 108,39 | 118,32 | 127,48 | 51,76 |
| | | 41 | 68,36 | 73,36 | 78,25 | 83,25 | 88,25 | 93,25 | 98,57 | 103,56 | 108,56 | 118,50 | 127,63 | 51,91 |
| | | 42 | 68,52 | 73,52 | 78,41 | 83,41 | 88,41 | 93,41 | 98,74 | 103,73 | 108,73 | 118,68 | 127,78 | 52,06 |
| | | 43 | 68,68 | 73,68 | 78,57 | 83,57 | 88,57 | 93,57 | 98,91 | 103,90 | 108,90 | 118,86 | 127,93 | 52,21 |
| | | 44 | 68,84 | 73,84 | 78,73 | 83,73 | 88,73 | 93,73 | 99,08 | 104,07 | 109,07 | 119,04 | 128,08 | 52,36 |
| | | 45 | 69,00 | 74,00 | 78,89 | 83,89 | 88,89 | 93,89 | 99,25 | 104,24 | 109,24 | 119,22 | 128,23 | 52,51 |
| | | 46 | 69,16 | 74,16 | 79,05 | 84,05 | 89,05 | 94,05 | 99,42 | 104,41 | 109,41 | 119,40 | 128,38 | 52,66 |
| | | 47 | 69,32 | 74,32 | 79,21 | 84,21 | 89,21 | 94,21 | 99,59 | 104,58 | 109,58 | 119,58 | 128,53 | 52,81 |
| | | 48 | 69,48 | 74,48 | 79,37 | 84,37 | 89,37 | 94,37 | 99,76 | 104,75 | 109,75 | 119,76 | 128,68 | 52,96 |
| | | 49 | 69,64 | 74,64 | 79,53 | 84,53 | 89,53 | 94,53 | | | | | 128,83 | 53,11 |
| | калибрующих | 50 | 69,64 | 74,64 | 79,69 | 84,69 | 89,69 | 94,69 | 99,76 | 104,75 | 109,75 | 119,76 | 128,98 | 53,26 |
| | | 51 | | | | | | | | | | | 129,13 | 53,41 |
| | | 52 | | | 79,69 | 84,69 | 89,69 | 94,69 | | | | | 129,28 | 53,56 |
| | | 53 | | | | | | | | | | | 129,43 | 53,71 |
| | | 54 | | | | | | | | | | | 129,58 | 53,86 |
| | | 55 | | | | | | | | | | | 129,73 | 54,01 |
| | | 56 | | | | | | | — | — | — | — | 129,73 | 54,16 |
| | | 57 | — | — | — | — | — | — | | | | | | 54,31 |
| | | 58 | | | | | | | | | | | | 54,46 |
| | | 59 | | | | | | | | | | | | 54,61 |
| | | 60 | | | | | | | | | | | — | 54,76 |
| | | 61 | | | | | | | | | | | | 54,76 |
| | | 62 | | | | | | | | | | | | |

*Продолжение табл. 4*

Размеры, мм

| Обозначение протяжки | | | | 2403-3633 2403-3636 | 2403-3639 2403-3643 | 2403-3646 2403 3649 | 2403-3653 2403-3656 | 2403-3659 2403-3663 | 2403-3666 2403-3669 | 2403-3673 2403-3676 | 2403-3679 2403-3683 | 2403 3686 | 2403 3689 | 2403-3693 | 2403-3696 |
|---|---|---|---|---|---|---|---|---|---|---|---|---|---|---|---|
| $D \times m$ | | | | 60×3,5 | 65×3,5 | 70×3,5 | 75×3,5 | 80×3,5 | 85×3,5 | 90×3,5 | 95×3,5 | 100×3,5 | 105×3,5 | 110×3,5 | 120×3,5 |
| Номера и диаметры $D_i$, зубьев | фасочных | черновых и переходных | | 1 | 52,40 | 57,40 | 62,40 | 67,40 | 72,40 | 77,40 | 82,40 | 87,40 | 92,40 | 97,40 | 102,40 | 112,40 |
| | | | | 2 | 52,54 | 57,53 | 62,52 | 67,55 | 72,55 | 77,56 | 82,56 | 87,56 | 92,56 | 97,56 | 102,56 | 112,55 |
| | | | | 3 | 52,68 | 57,66 | 62,64 | 67,70 | 72,70 | 77,72 | 82,72 | 87,72 | 92,72 | 97,72 | 102,72 | 112,70 |
| | | | | 4 | 52,82 | 57,79 | 62,76 | 67,85 | 72,85 | 77,88 | 82,88 | 87,88 | 92,88 | 97,88 | 102,88 | 112,85 |
| | | | | 5 | 52,96 | 57,92 | 62,88 | 68,00 | 73,00 | 78,04 | 83,04 | 88,04 | 93,04 | 98,04 | 103,04 | 113,00 |
| | | | | 6 | 53,10 | 58,05 | 63,00 | 68,15 | 73,15 | 78,20 | 83,20 | 88,20 | 93,20 | 98,20 | 103,20 | 113,15 |
| | | | | 7 | 53,24 | 58,18 | 63,12 | 68,30 | 73,30 | 78,36 | 83,36 | 88,36 | 93,36 | 98,36 | 103,36 | 113,30 |
| | | | | 8 | 53,38 | 58,31 | 63,24 | 68,45 | 73,45 | 78,52 | 83,52 | 88,52 | 93,52 | 98,52 | 103,52 | 113,45 |
| | | | | 9 | 53,52 | 58,44 | 63,36 | 68,60 | 73,60 | 78,68 | 83,68 | 88,68 | 93,68 | 98,68 | 103,68 | 113,60 |
| | | | | 10 | 53,66 | 58,57 | 63,48 | 68,75 | 73,75 | 78,84 | 83,84 | 88,84 | 93,84 | 98,84 | 103,84 | 113,75 |
| | | | | 11 | 53,80 | 58,70 | 63,60 | 68,90 | 73,90 | 79,00 | 84,00 | 89,00 | 94,00 | 99,00 | 104,00 | 113,90 |
| | | | | 12 | 53,94 | 58,83 | 63,72 | 69,05 | 74,05 | 79,16 | 84,16 | 89,16 | 94,16 | 99,16 | 104,16 | 114,05 |
| | | | | 13 | 54,08 | 58,96 | 63,84 | 67,61 | 74,20 | 77,58 | 82,61 | 87,61 | 92,61 | 97,61 | 102,61 | 114,20 |
| | | | | 14 | 52,61 | 59,09 | 63,96 | 67,76 | 72,61 | 77,74 | 82,77 | 87,77 | 92,77 | 97,77 | 102,77 | 112,64 |
| | | | | 15 | 52,76 | 57,61 | 64,08 | 67,91 | 72,76 | 77,90 | 82,93 | 87,93 | 92,93 | 97,93 | 102,93 | 112,79 |
| | | | | 16 | 52,91 | 57,76 | 62,61 | 68,06 | 72,91 | 78,06 | 83,09 | 88,09 | 93,09 | 98,09 | 103,09 | 112,94 |
| | | | | 17 | 53,06 | 57,91 | 62,76 | 68,13 | 73,06 | 78,13 | 83,16 | 88,16 | 93,16 | 98,16 | 103,16 | 113,09 |
| | | | | 18 | 53,13 | 58,06 | 62,91 | 68,16 | 73,13 | 78,16 | 83,19 | 88,19 | 93,19 | 98,19 | 103,19 | 113,16 |
| | | | | 19 | 53,16 | 58,13 | 63,06 | | 73,16 | | | | | | | 113,19 |
| | | | | 20 | | 58,16 | 63,13 | 68,16 | | 78,16 | 83,19 | 88,19 | 93,19 | 98,19 | 103,19 | |
| | | | | 21 | 53,16 | | 63,16 | | 73,16 | | | | | | | 113,19 |
| | | | | 22 | | 58,16 | | 69,20 | | 79,33 | 84,33 | 89,33 | 94,33 | 99,33 | 104,33 | |
| | | | | 23 | 54,23 | | 63,16 | 69,35 | 74,35 | 79,50 | 84,50 | 89,50 | 94,50 | 99,50 | 104,50 | 114,37 |
| | | | | 24 | 54,38 | 59,24 | | 69,50 | 74,50 | 79,67 | 84,67 | 89,67 | 94,67 | 99,67 | 104,67 | 114,54 |
| | | | | 25 | 54,53 | 59,39 | 64,23 | 69,65 | 74,65 | 79,84 | 84,84 | 89,84 | 94,84 | 99,84 | 104,84 | 114,71 |
| | | круглых | чистовых | | | | | | | | | | | | | |
| | | | калибрующих | | | | | | | | | | | | | |
| | | шлицевых | черновых | | | | | | | | | | | | | |

*Продолжение табл. 4*

Размеры, мм

| Обозначение протяжки | | | 2403-3633 2403-3636 | 2403-3639 2403-3643 | 2403-3646 2403-3649 | 2403-3653 2403-3656 | 2403-3659 2403-3663 | 2403-3666 2403-3669 | 2403-3673 2403-3676 | 2403-3679 2403-3683 | 2403-3686 | 2403-3689 | 2403-3693 | 2403-3696 |
|---|---|---|---|---|---|---|---|---|---|---|---|---|---|---|
| $D \times m$ | | | 60×3,5 | 65×3,5 | 70×3,5 | 75×3,5 | 80×3,5 | 85×3,5 | 90×3,5 | 95×3,5 | 100×3,5 | 105×3,5 | 110×3,5 | 120×3,5 |
| Номера и диаметры $D_1$ зубьев | шлицевых | черновых | 26 | 54,68 | 59,54 | 64,38 | 69,80 | 74,80 | 80,01 | 85,01 | 90,01 | 95,01 | 100,01 | 105,01 | 114,88 |
| | | | 27 | 54,83 | 59,69 | 64,53 | 69,95 | 74,95 | 80,18 | 85,18 | 90,18 | 95,18 | 100,18 | 105,18 | 115,05 |
| | | | 28 | 54,98 | 59,84 | 64,68 | 70,10 | 75,10 | 80,35 | 85,35 | 90,35 | 95,35 | 100,35 | 105,35 | 115,22 |
| | | | 29 | 55,13 | 59,99 | 64,83 | 70,25 | 75,25 | 80,52 | 85,52 | 90,52 | 95,52 | 100,52 | 105,52 | 115,39 |
| | | | 30 | 55,28 | 60,14 | 64,98 | 70,40 | 75,40 | 80,69 | 85,69 | 90,69 | 95,69 | 100,69 | 105,69 | 115,56 |
| | | | 31 | 55,43 | 60,29 | 65,13 | 70,55 | 75,55 | 80,86 | 85,86 | 90,86 | 95,86 | 100,86 | 105,86 | 115,73 |
| | | | 32 | 55,58 | 60,44 | 65,28 | 70,70 | 75,70 | 81,03 | 86,03 | 91,03 | 96,03 | 101,03 | 106,03 | 115,90 |
| | | | 33 | 55,73 | 60,59 | 65,43 | 70,85 | 75,85 | 81,20 | 86,20 | 91,20 | 96,20 | 101,20 | 106,20 | 116,07 |
| | | | 34 | 55,88 | 60,74 | 65,58 | 71,00 | 76,00 | 81,37 | 86,37 | 91,37 | 96,37 | 101,37 | 106,37 | 116,24 |
| | | | 35 | 56,03 | 60,89 | 65,73 | 71,15 | 76,15 | 81,54 | 86,54 | 91,54 | 96,54 | 101,54 | 106,54 | 116,41 |
| | | | 36 | 56,18 | 61,04 | 65,88 | 71,30 | 76,30 | 81,71 | 86,71 | 91,71 | 96,71 | 101,71 | 106,71 | 116,58 |
| | | | 37 | 56,33 | 61,19 | 66,03 | 71,45 | 76,45 | 81,88 | 86,88 | 91,88 | 96,88 | 101,88 | 106,88 | 116,75 |
| | | | 38 | 56,48 | 61,34 | 66,18 | 71,60 | 76,60 | 82,05 | 87,05 | 92,05 | 97,05 | 102,05 | 107,05 | 116,92 |
| | | | 39 | 56,63 | 61,49 | 66,33 | 71,75 | 76,75 | 82,22 | 87,22 | 92,22 | 97,22 | 102,22 | 107,22 | 117,09 |
| | | | 40 | 56,78 | 61,64 | 66,48 | 71,90 | 76,90 | 82,39 | 87,39 | 92,39 | 97,39 | 102,39 | 107,39 | 117,26 |
| | | | 41 | 56,93 | 61,79 | 66,63 | 72,05 | 77,05 | 82,56 | 87,56 | 92,56 | 97,56 | 102,56 | 107,56 | 117,43 |
| | | | 42 | 57,08 | 61,94 | 66,78 | 72,20 | 77,20 | 82,73 | 87,73 | 92,73 | 97,73 | 102,73 | 107,73 | 117,60 |
| | | | 43 | 57,23 | 62,09 | 66,93 | 72,35 | 77,35 | 82,90 | 87,90 | 92,90 | 97,90 | 102,90 | 107,90 | 117,77 |
| | | | 44 | 57,38 | 62,24 | 67,08 | 72,50 | 77,50 | 83,07 | 88,07 | 93,07 | 98,07 | 103,07 | 108,07 | 117,94 |
| | | | 45 | 57,53 | 62,39 | 67,23 | 72,65 | 77,65 | 83,24 | 88,24 | 93,24 | 98,24 | 103,24 | 108,24 | 118,11 |
| | | | 46 | 57,68 | 62,54 | 67,38 | 72,80 | 77,80 | 83,41 | 88,41 | 93,41 | 98,41 | 103,41 | 108,41 | 118,28 |
| | | | 47 | 57,83 | 62,69 | 67,53 | 72,95 | 77,95 | 83,58 | 88,58 | 93,58 | 98,58 | 103,58 | 108,58 | 118,45 |

*Продолжение табл. 4*

Размеры, мм

| Обозначение протяжки | | | | 2403-3633<br>2403-3636 | 2403-3639<br>2403-3643 | 2403-3646<br>2403-3649 | 2403-3653<br>2403-3656 | 2403-3659<br>2403-3663 | 2403-3666<br>2403-3669 | 2403-3673<br>2403-3676 | 2403-3679<br>2403-3683 | 2403-3686 | 2403-3689 | 2403-3693 | 2403-3696 |
|---|---|---|---|---|---|---|---|---|---|---|---|---|---|---|---|
| $D \times m$ | | | | 60×3,5 | 65×3,5 | 70×3,5 | 75×3,5 | 80×3,5 | 85×3,5 | 90×3,5 | 95×3,5 | 100×3,5 | 105×3,5 | 110×3,5 | 120×3,5 |
| Номера и диаметры $D_i$ зубьев | шлицевых | черновых | 48 | 57,98 | 62,84 | 67,68 | 73,10 | 78,10 | 83,75 | 88,75 | 93,75 | 98,75 | 103,75 | 108,75 | 118,62 |
| | | | 49 | 58,13 | 62,99 | 67,83 | 73,25 | 78,25 | 83,92 | 88,92 | 93,92 | 98,92 | 103,92 | 108,92 | 118,79 |
| | | | 50 | 58,28 | 63,14 | 67,98 | 73,40 | 78,40 | 84,09 | 89,09 | 94,09 | 99,09 | 104,09 | 109,09 | 118,96 |
| | | | 51 | 58,43 | 63,29 | 68,13 | 73,55 | 78,55 | 84,26 | 89,26 | 94,26 | 99,26 | 104,26 | 109,26 | 119,13 |
| | | | 52 | 58,58 | 63,44 | 68,28 | 73,70 | 78,70 | 84,43 | 89,43 | 94,43 | 99,43 | 104,43 | 109,43 | 119,30 |
| | | | 53 | 58,73 | 63,59 | 68,43 | 73,85 | 78,85 | 84,60 | 89,60 | 94,60 | 99,60 | 104,60 | 109,60 | 119,47 |
| | | | 54 | 58,88 | 63,74 | 68,58 | 74,00 | 79,00 | 84,77 | 89,77 | 94,77 | 99,77 | 104,77 | 109,77 | 119,64 |
| | | | 55 | 59,03 | 63,89 | 68,73 | 74,15 | 79,15 | 84,77 | 89,77 | 94,77 | 99,77 | 104,77 | 109,77 | 119,64 |
| | | | 56 | 59,18 | 64,04 | 68,88 | 74,30 | 79,30 | | | | | | | |
| | | | 57 | 59,33 | 64,19 | 69,03 | 74,45 | 79,45 | | | | | | | |
| | | | 58 | 59,48 | 64,34 | 69,18 | 74,60 | 79,60 | | | | | | | |
| | | | 59 | 59,63 | 64,49 | 69,33 | 74,75 | 79,75 | | | | | | | |
| | | | 60 | 59,78 | 64,64 | 69,48 | 74,75 | 79,75 | — | — | — | — | — | — | — |
| | | калибрующих | 61 | 59,78 | 64,64 | 69,63 | | | | | | | | | |
| | | | 62 | | | 69,78 | | | | | | | | | |
| | | | 63 | — | — | 69,78 | — | — | | | | | | | |
| | | | 64 | | | | | | | | | | | | |

*Продолжение табл. 4*

Размеры, мм

| Обозначение протяжки | | | | 2403-3699 | 2403 3703<br>2403-3706 | 2403-3709 | 2403-3713 | 2403-3716 | 2403-3719 | 2403-3723<br>2403 3726 | 2403-3729<br>2403-3733 | 2403-3736 | 2403-3739 | 2403-3743 | 2403-3746 |
|---|---|---|---|---|---|---|---|---|---|---|---|---|---|---|---|
| $D \times m$ | | | | 130×3,5 | 60×4 | 65×4 | | 70×4 | | 75×4 | 80×4 | 85×4 | | 90×4 | |
| Номера и диаметры $D_i$ зубьев | фасочных | черновых и переходных | 1 | 122,40 | 51,40 | 56,40 | 56,40 | 61,40 | 61,40 | 66,40 | 71,40 | 76,40 | 76,40 | 81,40 | 81,40 |
| | | | 2 | 122,52 | 51,55 | 56,55 | 56,54 | 61,54 | 61,52 | 66,55 | 71,55 | 76,55 | 76,57 | 81,55 | 81,57 |
| | | | 3 | 122,64 | 51,70 | 56,70 | 56,68 | 61,68 | 61,64 | 66,70 | 71,70 | 76,70 | 76,74 | 81,70 | 81,74 |
| | | | 4 | 122,76 | 51,85 | 56,85 | 56,82 | 61,82 | 61,76 | 66,85 | 71,85 | 76,85 | 76,91 | 81,85 | 81,91 |
| | | | 5 | 122,88 | 52,00 | 57,00 | 56,96 | 61,96 | 61,88 | 67,00 | 72,00 | 77,00 | 77,08 | 82,00 | 82,08 |
| | | | 6 | 123,00 | 52,15 | 57,15 | 57,10 | 62,10 | 62,00 | 67,15 | 72,15 | 77,15 | 77,25 | 82,15 | 82,25 |
| | | | 7 | 123,12 | 52,30 | 57,30 | 57,24 | 62,24 | 62,12 | 67,30 | 72,30 | 77,30 | 77,42 | 82,30 | 82,42 |
| | | | 8 | 123,24 | 52,45 | 57,45 | 57,38 | 62,38 | 62,24 | 67,45 | 72,45 | 77,45 | 77,59 | 82,45 | 82,59 |
| | | | 9 | 123,36 | 52,60 | 57,60 | 57,52 | 62,52 | 62,36 | 67,60 | 72,60 | 77,60 | 77,76 | 82,60 | 82,76 |
| | | | 10 | 123,48 | 52,75 | 57,75 | 57,66 | 62,66 | 62,48 | 67,75 | 72,75 | 77,75 | 77,93 | 82,75 | 82,93 |
| | | | 11 | 123,60 | 52,90 | 57,90 | 57,80 | 62,80 | 62,60 | 67,90 | 72,90 | 77,90 | 78,10 | 82,90 | 83,10 |
| | | | 12 | 123,72 | 53,05 | 58,05 | 57,94 | 62,94 | 62,72 | 68,05 | 73,05 | 78,05 | 78,27 | 83,05 | 83,27 |
| | | | 13 | 123,84 | 53,20 | 58,20 | 58,08 | 63,08 | 62,84 | 68,20 | 73,20 | 78,20 | 76,61 | 83,20 | 81,64 |
| | | | 14 | 123,96 | 51,61 | 56,61 | 58,22 | 61,61 | 62,96 | 66,61 | 71,61 | 76,61 | 76,76 | 81,64 | 81,79 |
| | | | 15 | 124,08 | 51,76 | 56,76 | 56,61 | 61,76 | 63,08 | 66,76 | 71,76 | 76,76 | 76,91 | 81,79 | 81,94 |
| | | | 16 | 122,63 | 51,91 | 56,91 | 56,76 | 61,91 | 61,61 | 66,91 | 71,91 | 76,91 | 77,06 | 81,94 | 82,09 |
| | | | 17 | 122,79 | 52,06 | 57,06 | 56,91 | 62,06 | 61,76 | 67,06 | 72,06 | 77,06 | 77,13 | 82,09 | 82,16 |
| | | | 18 | 122,95 | 52,13 | 57,13 | 57,06 | 62,13 | 61,91 | 67,13 | 72,13 | 77,13 | 77,16 | 82,16 | 82,19 |
| | | | 19 | 123,11 | 52,16 | 57,16 | 57,13 | 62,16 | 62,06 | 67,16 | 72,16 | 77,16 | 77,16 | 82,19 | 82,19 |
| | круглых | чисто-вых | 20 | 123,18 | 52,16 | 57,16 | 57,16 | 62,16 | 62,13 | 67,16 | 72,16 | 77,16 | 77,16 | 82,19 | 82,19 |
| | | | 21 | 123,21 | | | | | 62,16 | | | | | | |
| | | калиб-рующих | 22 | 123,21 | | | 57,16 | | 62,16 | | | | 78,44 | | 83,44 |
| | | | 23 | | 53,35 | 58,35 | | 63,23 | | 68,35 | 73,35 | 78,35 | 78,61 | 83,35 | 83,61 |
| | | | 24 | | 53,50 | 58,50 | 58,37 | 63,38 | | 68,50 | 73,50 | 78,50 | 78,78 | 83,50 | 83,78 |
| | | | 25 | 124,23 | 53,65 | 58,65 | 58,52 | 63,53 | 66,23 | 68,65 | 73,65 | 78,65 | 78,95 | 83,65 | 83,95 |

*Продолжение табл. 4*

Размеры, мм

| Обозначение протяжки | | | 2403-3699 | 2403-3703 2403-3706 | 2403-3709 | 2403 3713 | 2403-3716 | 2403-3719 | 2403-3723 2403-3726 | 2403-3729 2403-3733 | 2403-3736 | 2403-3739 | 2403-3743 | 2403-3746 |
|---|---|---|---|---|---|---|---|---|---|---|---|---|---|---|
| $D \times m$ | | | 130×3,5 | 60×4 | 65×4 | | 70×4 | | 75×4 | 80×4 | 85×4 | | 90×4 | |
| Номера и диаметры $D_i$ зубьев | шлицевых | черновых | | | | | | | | | | | | |
| | | 26 | 124,38 | 53,80 | 58,80 | 58,67 | 63,68 | 63,38 | 68,80 | 73,80 | 78,80 | 79,12 | 83,80 | 84,12 |
| | | 27 | 124,53 | 53,95 | 58,95 | 58,82 | 63,83 | 63,53 | 68,95 | 73,95 | 78,95 | 79,29 | 83,95 | 84,29 |
| | | 28 | 124,68 | 54,10 | 59,10 | 58,97 | 63,98 | 63,68 | 69,10 | 74,10 | 79,10 | 79,46 | 84,10 | 84,46 |
| | | 29 | 124,83 | 54,25 | 59,25 | 59,12 | 64,13 | 63,83 | 69,25 | 74,25 | 79,25 | 79,63 | 84,25 | 84,63 |
| | | 30 | 124,98 | 54,40 | 59,40 | 59,27 | 64,28 | 63,98 | 69,40 | 74,40 | 79,40 | 79,80 | 84,40 | 84,80 |
| | | 31 | 125,13 | 54,55 | 59,55 | 59,42 | 64,43 | 64,13 | 69,55 | 74,55 | 79,55 | 79,97 | 84,55 | 84,97 |
| | | 32 | 125,28 | 54,70 | 59,70 | 59,57 | 64,58 | 64,28 | 69,70 | 74,70 | 79,70 | 80,14 | 84,70 | 85,14 |
| | | 33 | 125,43 | 54,85 | 59,85 | 59,72 | 64,73 | 64,43 | 69,85 | 74,85 | 79,85 | 80,31 | 84,85 | 85,31 |
| | | 34 | 125,58 | 55,00 | 60,00 | 59,87 | 64,88 | 64,58 | 70,00 | 75,00 | 80,00 | 80,48 | 85,00 | 85,48 |
| | | 35 | 125,73 | 55,15 | 60,15 | 60,02 | 65,03 | 64,73 | 70,15 | 75,15 | 80,15 | 80,65 | 85,15 | 85,65 |
| | | 36 | 125,88 | 55,30 | 60,30 | 60,17 | 65,18 | 64,88 | 70,30 | 75,30 | 80,30 | 80,82 | 85,30 | 85,82 |
| | | 37 | 126,03 | 55,45 | 60,45 | 60,32 | 65,33 | 65,03 | 70,45 | 75,45 | 80,45 | 80,99 | 85,45 | 85,99 |
| | | 38 | 126,18 | 55,60 | 60,60 | 60,47 | 65,48 | 65,18 | 70,60 | 75,60 | 80,60 | 81,16 | 85,60 | 86,16 |
| | | 39 | 126,33 | 55,75 | 60,75 | 60,62 | 65,63 | 65,33 | 70,75 | 75,75 | 80,75 | 81,33 | 85,75 | 86,33 |
| | | 40 | 126,48 | 55,90 | 60,90 | 60,77 | 65,78 | 65,48 | 70,90 | 75,90 | 80,90 | 81,50 | 85,90 | 86,50 |
| | | 41 | 126,63 | 56,05 | 61,05 | 60,92 | 65,93 | 65,63 | 71,05 | 76,05 | 81,05 | 81,67 | 86,05 | 86,67 |
| | | 42 | 126,78 | 56,20 | 61,20 | 61,07 | 66,08 | 65,78 | 71,20 | 76,20 | 81,20 | 81,84 | 86,20 | 86,84 |
| | | 43 | 126,93 | 56,35 | 61,35 | 61,22 | 63,23 | 65,93 | 71,35 | 76,35 | 81,35 | 82,01 | 86,35 | 87,01 |
| | | 44 | 127,08 | 56,50 | 61,50 | 61,37 | 66,38 | 66,08 | 71,50 | 76,50 | 81,50 | 82,18 | 86,50 | 87,18 |
| | | 45 | 127,23 | 56,65 | 61,65 | 61,52 | 66,53 | 66,23 | 71,65 | 76,65 | 81,65 | 82,35 | 86,65 | 87,35 |
| | | 46 | 127,38 | 56,80 | 61,80 | 61,67 | 66,68 | 66,38 | 71,80 | 76,80 | 81,80 | 82,52 | 86,80 | 87,52 |
| | | 47 | 127,53 | 56,95 | 61,95 | 61,82 | 66,83 | 66,53 | 71,95 | 76,95 | 81,95 | 82,69 | 86,95 | 87,69 |
| | | 48 | 127,68 | 57,10 | 62,10 | 61,97 | 66,98 | 66,68 | 72,10 | 77,10 | 82,10 | 82,86 | 87,10 | 87,86 |

*Продолжение табл. 4*

Размеры, мм

| Обозначение протяжки | | | 2403-3699 | 2403-3703<br>2403-3706 | 2403-3709 | 2403-3713 | 2403-3716 | 2403-3719 | 2403-3723<br>2403-3726 | 2403-3729<br>2403-3733 | 2403-3736 | 2403-3739 | 2403-3743 | 2403-3746 |
|---|---|---|---|---|---|---|---|---|---|---|---|---|---|---|
| $D \times m$ | | | 130×3,5 | 60×4 | 65×4 | | 70×4 | | 75×4 | 80×4 | 85×4 | | 90×4 | |
| Номера и диаметры $D_i$ зубьев шлицевых | черновых | 49 | 127,83 | 57,25 | 62,25 | 62,12 | 67,13 | 66,83 | 72,25 | 77,25 | 82,25 | 83,03 | 87,25 | 88,03 |
| | | 50 | 127,98 | 57,40 | 62,40 | 62,27 | 67,28 | 66,98 | 72,40 | 77,40 | 82,40 | 83,20 | 87,40 | 88,20 |
| | | 51 | 128,13 | 57,55 | 62,55 | 62,42 | 67,43 | 67,13 | 72,55 | 77,55 | 82,55 | 83,37 | 87,55 | 88,37 |
| | | 52 | 128,28 | 57,70 | 62,70 | 62,57 | 67,58 | 67,28 | 72,70 | 77,70 | 82,70 | 83,54 | 87,70 | 88,54 |
| | | 53 | 128,43 | 57,85 | 62,85 | 62,72 | 67,73 | 67,43 | 72,85 | 77,85 | 82,85 | 83,71 | 87,85 | 88,71 |
| | | 54 | 128,58 | 58,00 | 63,00 | 62,87 | 67,88 | 67,58 | 73,00 | 78,00 | 83,00 | 83,88 | 88,00 | 88,88 |
| | | 55 | 128,73 | 58,15 | 63,15 | 63,02 | 68,03 | 67,73 | 73,15 | 78,15 | 83,15 | 84,05 | 88,15 | 89,05 |
| | | 56 | 128,88 | 58,30 | 63,30 | 63,17 | 68,18 | 67,88 | 73,30 | 78,30 | 83,30 | 84,22 | 88,30 | 89,22 |
| | | 57 | 129,03 | 58,45 | 63,45 | 63,32 | 68,33 | 68,03 | 73,45 | 78,45 | 83,45 | 84,39 | 88,45 | 89,39 |
| | | 58 | 129,18 | 58,60 | 63,60 | 63,47 | 68,48 | 68,18 | 73,60 | 78,60 | 83,60 | 84,56 | 88,60 | 89,56 |
| | | 59 | 129,33 | 58,75 | 63,75 | 63,62 | 68,63 | 68,33 | 73,75 | 78,75 | 83,75 | 84,73 | 88,75 | 89,73 |
| | | 60 | 129,48 | 58,90 | 63,90 | 63,77 | 68,78 | 68,48 | 73,90 | 78,90 | 83,90 | 84,73 | 88,90 | 89,73 |
| | | 61 | 129,63 | 59,05 | 64,05 | 63,92 | 68,93 | 68,63 | 74,05 | 79,05 | 84,05 | | 89,05 | |
| | | 62 | 129,78 | 59,20 | 64,20 | 64,07 | 69,08 | 68,78 | 74,20 | 79,20 | 84,20 | | 89,20 | |
| | калибрующих | 63 | 129,78 | 59,35 | 64,35 | 64,22 | 69,23 | 68,93 | 74,35 | 79,35 | 84,35 | | 89,35 | |
| | | 64 | | 59,50 | 64,50 | 64,37 | 69,38 | 69,08 | 74,50 | 79,50 | 84,50 | | 89,50 | |
| | | 65 | | 59,65 | 64,65 | 64,52 | 69,53 | 69,23 | 74,65 | 79,65 | 84,65 | | 89,65 | |
| | | 66 | | 59,65 | 64,65 | 64,67 | 69,68 | 69,38 | 74,65 | 79,65 | 84,65 | — | 89,65 | — |
| | | 67 | — | | | 64,67 | 69,68 | 69,53 | | | | | | |
| | | 68 | | | | | | 69,68 | | | | | | |
| | | 69 | | — | — | | | 69,68 | — | — | — | | — | |
| | | 70 | | | | — | — | | | | | | | |

*Продолжение табл 4*

Размеры, мм

| Номера и диаметры $D_i$ зубьев | | | | Обозначение протяжки | 2403 3749 | 2403-3753 | 2403-3756 | 2403-3759 | 2403-3763 | 2403 3766 | 2403-3769 | 2403 3773 | 2403 3776 | 2403-3779 | 2403-3783 | 2403-3786 |
|---|---|---|---|---|---|---|---|---|---|---|---|---|---|---|---|---|
| | | | | $D \times m$ | 95×4 | | 100×4 | | 105×4 | | 110×4 | | 120×4 | | 130×4 | |
| круглых | фасочных | черновых и переходных | | 1 | 86,40 | 86,40 | 91,40 | 91,40 | 96,40 | 96,40 | 101,40 | 101,40 | 111,40 | 111,40 | 121,40 | 121,40 |
| | | | | 2 | 86,55 | 86,57 | 91,55 | 91,58 | 96,55 | 96,58 | 101,56 | 101,58 | 111,56 | 111,58 | 121,56 | 121,56 |
| | | | | 3 | 86,70 | 86,74 | 91,70 | 91,76 | 96,70 | 96,76 | 101,72 | 101,76 | 111,72 | 111,76 | 121,72 | 121,72 |
| | | | | 4 | 86,85 | 86,91 | 91,85 | 91,94 | 96,85 | 96,94 | 101,88 | 101,94 | 111,88 | 111,94 | 121,88 | 121,88 |
| | | | | 5 | 87,00 | 87,08 | 92,00 | 92,12 | 97,00 | 97,12 | 102,04 | 102,12 | 112,04 | 112,12 | 122,04 | 122,04 |
| | | | | 6 | 87,15 | 87,25 | 92,15 | 92,30 | 97,15 | 97,30 | 102,20 | 102,30 | 112,20 | 112,30 | 122,20 | 122,20 |
| | | | | 7 | 87,30 | 87,42 | 92,30 | 92,48 | 97,30 | 97,48 | 102,36 | 102,48 | 112,36 | 112,48 | 122,36 | 122,36 |
| | | | | 8 | 87,45 | 87,59 | 92,45 | 92,66 | 97,45 | 97,66 | 102,52 | 102,66 | 112,52 | 112,66 | 122,52 | 122,52 |
| | | | | 9 | 87,60 | 87,76 | 92,60 | 92,84 | 97,60 | 97,84 | 102,68 | 102,84 | 112,68 | 112,84 | 122,68 | 122,68 |
| | | | | 10 | 87,75 | 87,93 | 92,75 | 93,02 | 97,75 | 98,02 | 102,84 | 103,02 | 112,84 | 113,02 | 122,84 | 122,84 |
| | | | | 11 | 87,90 | 88,10 | 92,90 | 93,20 | 97,90 | 98,20 | 103,00 | 103,20 | 113,00 | 113,20 | 123,00 | 123,00 |
| | | | | 12 | 88,05 | 88,27 | 93,05 | 91,64 | 98,05 | 96,64 | 103,16 | 103,38 | 113,16 | 111,61 | 123,16 | 123,16 |
| | | | | 13 | 88,20 | 86,64 | 93,20 | 91,79 | 98,20 | 96,79 | 103,32 | 101,61 | 111,61 | 111,77 | 123,32 | 123,32 |
| | | | | 14 | 86,64 | 86,79 | 91,64 | 91,94 | 96,64 | 96,94 | 101,61 | 101,77 | 111,77 | 111,93 | 121,63 | 121,63 |
| | | | | 15 | 86,79 | 86,94 | 91,79 | 92,09 | 96,79 | 97,09 | 101,77 | 101,93 | 111,93 | 112,09 | 121,79 | 121,79 |
| | | | | 16 | 86,94 | 87,09 | 91,94 | 92,16 | 96,94 | 97,16 | 101,93 | 102,09 | 112,09 | 112,16 | 121,95 | 121,95 |
| | | | | 17 | 87,09 | 87,16 | 92,09 | 92,19 | 97,09 | 97,19 | 102,09 | 102,16 | 112,16 | 112,19 | 122,11 | 122,11 |
| | | чисто-вых | | 18 | 87,16 | 87,19 | 92,16 | 92,19 | 97,16 | 97,19 | 102,16 | 102,19 | 112,19 | 112,19 | 122,18 | 122,18 |
| | | | | 19 | 87,19 | 87,19 | 92,19 | | 97,19 | | 102,19 | 102,19 | 112,19 | | 122,21 | 122,21 |
| | | калибрующих | | 20 | 87,19 | | 92,19 | | 97,19 | | 102,19 | | | | 122,21 | 122,21 |
| | | | | 21 | | 87,19 | | 93,38 | | 98,38 | | | | 113,38 | | |
| | | | | 22 | | 88,44 | | 93,56 | | 98,56 | | 103,56 | 113,32 | 113,56 | | |
| шлицевых | | черновых | | 23 | 88,35 | 88,61 | 93,35 | 93,74 | 98,35 | 98,74 | 103,48 | 103,74 | 113,48 | 113,74 | 123,48 | 123,49 |
| | | | | 24 | 88,50 | 88,78 | 93,50 | 93,92 | 98,50 | 98,92 | 103,64 | 103,92 | 113,64 | 113,92 | 123,64 | 123,66 |

*Продолжение табл. 4*

Размеры, мм

| Обозначение протяжки | | | 2403-3749 | 2403-3753 | 2403-3756 | 2403-3759 | 2403-3763 | 2403-3766 | 2403-3769 | 2403-3773 | 2403-3776 | 2403-3779 | 2403-3783 | 2403-3786 |
|---|---|---|---|---|---|---|---|---|---|---|---|---|---|---|
| $D \times m$ | | | 95×4 | | 100×4 | | 105×4 | | 110×4 | | 120×4 | | 130×4 | |
| Номера и диаметры $D_i$ зубьев | шлицевых | черновых | | | | | | | | | | | | |
| | | 25 | 88,65 | 88,95 | 93,65 | 94,10 | 98,65 | 99,10 | 103,80 | 104,10 | 113,80 | 114,10 | 123,80 | 123,83 |
| | | 26 | 88,80 | 89,12 | 93,80 | 94,28 | 98,80 | 99,28 | 103,96 | 104,28 | 113,96 | 114,28 | 123,96 | 124,00 |
| | | 27 | 88,95 | 89,29 | 93,95 | 94,46 | 98,95 | 99,46 | 104,12 | 104,46 | 114,12 | 114,46 | 124,12 | 124,17 |
| | | 28 | 89,10 | 89,46 | 94,10 | 94,64 | 99,10 | 99,64 | 104,28 | 104,64 | 114,28 | 114,64 | 124,28 | 124,34 |
| | | 29 | 89,25 | 89,63 | 94,25 | 94,82 | 99,25 | 99,82 | 104,44 | 104,82 | 114,44 | 114,82 | 124,44 | 124,51 |
| | | 30 | 89,40 | 89,80 | 94,40 | 95,00 | 99,40 | 100,00 | 104,60 | 105,00 | 114,60 | 115,00 | 124,60 | 124,68 |
| | | 31 | 89,55 | 89,97 | 94,55 | 95,18 | 99,55 | 100,18 | 104,76 | 105,18 | 114,76 | 115,18 | 124,76 | 124,85 |
| | | 32 | 89,70 | 90,14 | 94,70 | 95,36 | 99,70 | 100,36 | 104,92 | 105,36 | 114,92 | 115,36 | 124,92 | 125,02 |
| | | 33 | 89,85 | 90,31 | 94,85 | 95,54 | 99,85 | 100,54 | 105,08 | 105,54 | 115,08 | 115,54 | 125,08 | 125,19 |
| | | 34 | 90,00 | 90,48 | 95,00 | 95,72 | 100,00 | 100,72 | 105,24 | 105,72 | 115,24 | 115,72 | 125,24 | 125,36 |
| | | 35 | 90,15 | 90,65 | 95,15 | 95,90 | 100,15 | 100,90 | 105,40 | 105,90 | 115,40 | 115,90 | 125,40 | 125,53 |
| | | 36 | 90,30 | 90,82 | 95,30 | 96,08 | 100,30 | 101,08 | 105,56 | 106,08 | 115,56 | 116,08 | 125,56 | 125,70 |
| | | 37 | 90,45 | 90,99 | 95,45 | 96,26 | 100,45 | 101,26 | 105,72 | 106,26 | 115,72 | 116,26 | 125,72 | 125,87 |
| | | 38 | 90,60 | 91,16 | 95,60 | 96,44 | 100,60 | 101,44 | 105,88 | 106,44 | 115,88 | 116,44 | 125,88 | 126,04 |
| | | 39 | 90,75 | 91,33 | 95,75 | 96,62 | 100,75 | 101,62 | 106,04 | 106,62 | 116,04 | 116,62 | 126,04 | 126,21 |
| | | 40 | 90,90 | 91,50 | 95,90 | 96,80 | 100,90 | 101,80 | 106,20 | 106,80 | 116,20 | 116,80 | 126,20 | 126,38 |
| | | 41 | 91,05 | 91,67 | 96,05 | 96,98 | 101,05 | 101,98 | 106,36 | 106,98 | 116,36 | 116,98 | 126,36 | 126,55 |
| | | 42 | 91,20 | 91,84 | 96,20 | 97,16 | 101,20 | 102,16 | 106,52 | 107,16 | 116,52 | 117,16 | 126,52 | 126,72 |
| | | 43 | 91,35 | 92,01 | 96,35 | 97,34 | 101,35 | 102,34 | 106,68 | 107,34 | 116,68 | 117,34 | 126,68 | 126,89 |
| | | 44 | 91,50 | 92,18 | 96,50 | 97,52 | 101,50 | 102,52 | 106,84 | 107,52 | 116,84 | 117,52 | 126,84 | 127,06 |
| | | 45 | 91,65 | 92,35 | 96,65 | 97,70 | 101,65 | 102,70 | 107,00 | 107,70 | 117,00 | 117,70 | 127,00 | 127,23 |
| | | 46 | 91,80 | 92,52 | 96,80 | 97,88 | 101,80 | 102,88 | 107,16 | 107,88 | 117,16 | 117,88 | 127,16 | 127,40 |
| | | 47 | 91,95 | 92,69 | 96,95 | 98,06 | 101,95 | 103,06 | 107,32 | 108,06 | 117,32 | 118,06 | 127,32 | 127,57 |
| | | 48 | 92,10 | 92,86 | 97,10 | 98,24 | 102,10 | 103,24 | 107,48 | 108,24 | 117,48 | 118,24 | 127,48 | 127,74 |

*Продолжение табл. 4*

Размеры, мм

| Обозначение протяжки | | | | 2403-3749 | 2403-3753 | 2403 3756 | 2403-3759 | 2403-3763 | 2403-3766 | 2403-3769 | 2403-3773 | 2403-3776 | 2403-3779 | 2403-3783 | 2403-3786 |
|---|---|---|---|---|---|---|---|---|---|---|---|---|---|---|---|
| $D \times m$ | | | | 95×4 | | 100×4 | | 105×4 | | 110×4 | | 120×4 | | 130×4 | |
| Номера и диаметры $D_i$ зубьев | шлицевых | черновых | 49 | 92,25 | 93,03 | 97,25 | 98,42 | 102,25 | 103,42 | 107,64 | 108,42 | 117,64 | 118,42 | 127,64 | 127,91 |
| | | | 50 | 92,40 | 93,20 | 97,40 | 98,60 | 102,40 | 103,60 | 107,80 | 108,60 | 117,80 | 118,60 | 127,80 | 128,08 |
| | | | 51 | 92,55 | 93,37 | 97,55 | 98,78 | 102,55 | 103,78 | 107,96 | 108,78 | 117,96 | 118,78 | 127,96 | 128,25 |
| | | | 52 | 92,70 | 93,54 | 97,70 | 98,96 | 102,70 | 103,96 | 108,12 | 108,96 | 118,12 | 118,96 | 128,12 | 128,42 |
| | | | 53 | 92,85 | 93,71 | 97,85 | 99,14 | 102,85 | 104,14 | 108,28 | 109,14 | 118,28 | 119,14 | 128,28 | 128,59 |
| | | | 54 | 93,00 | 93,88 | 98,00 | 99,32 | 103,00 | 104,32 | 108,44 | 109,32 | 118,44 | 119,32 | 128,44 | 128,76 |
| | | | 55 | 93,15 | 94,05 | 98,15 | 99,50 | 103,15 | 104,50 | 108,60 | 109,50 | 118,60 | 119,50 | 128,60 | 128,93 |
| | | | 56 | 93,30 | 94,22 | 98,30 | 99,68 | 103,30 | 104,68 | 108,76 | 109,68 | 118,76 | 119,68 | 128,76 | 129,10 |
| | | | 57 | 93,45 | 94,39 | 98,45 | 99,68 | 103,45 | 104,68 | 108,92 | 109,68 | 118,92 | 119,68 | 128,92 | 129,27 |
| | | | 58 | 93,60 | 94,56 | 98,60 | | 103,60 | | 109,08 | | 119,08 | | 129,08 | 129,44 |
| | | | 59 | 93,75 | 94,73 | 98,75 | | 103,75 | | 109,24 | | 119,24 | | 129,24 | 129,61 |
| | | | 60 | 93,90 | | 98,90 | | 103,90 | | 109,40 | | 119,40 | | 129,40 | 129,78 |
| | | | 61 | 94,05 | 94,73 | 99,05 | | 104,05 | | 109,56 | | 119,56 | | 129,56 | 129,78 |
| | | | 62 | 94,20 | | 99,20 | | 104,20 | | 109,72 | | 119,72 | | 129,72 | |
| | | | 63 | 94,35 | | 99,35 | — | 104,35 | — | 109,72 | — | 119,72 | — | 129,72 | |
| | | | 64 | 94,50 | — | 99,50 | | 104,50 | | | | | | | — |
| | | | 65 | 94,65 | | 99,65 | | 104,65 | | — | | — | | — | |
| | | калибрующих | 66 | 94,65 | | 99,65 | | 104,65 | | | | | | | |
| | | | 67 | | | | | | | | | | | | |

*Продолжение табл. 4*

Размеры, мм

| Обозначение протяжки | | | | 2403-3789 | 2403-3793 | 2403-3796 | 2403-3799 | 2403-3803 | 2403-3806 | 2403-3809 | 2403-3813 | 2403-3816 | 2403-3819 | 2403-3823 |
|---|---|---|---|---|---|---|---|---|---|---|---|---|---|---|
| $D \times m$ | | | | 70×5 | 75×5 | 80×5 | 85×5 | 90×5 | 95×5 | 100×5 | 105×5 | 110×5 | 120×5 | 130×5 |
| Номера и диаметры $D$, зубьев | фасочных | черновых и переходных | 1 | 59,40 | 64,40 | 69,40 | 74,40 | 79,40 | 84,40 | 89,40 | 94,40 | 99,40 | 109,40 | 119,40 |
| | | | 2 | 59,55 | 64,55 | 69,55 | 74,56 | 79,56 | 84,56 | 89,56 | 94,56 | 99,56 | 109,56 | 119,56 |
| | | | 3 | 59,70 | 64,70 | 69,70 | 74,72 | 79,72 | 84,72 | 89,72 | 94,72 | 99,72 | 109,72 | 119,72 |
| | | | 4 | 59,85 | 64,85 | 69,85 | 74,88 | 79,88 | 84,88 | 89,88 | 94,88 | 99,88 | 109,88 | 119,88 |
| | | | 5 | 60,00 | 65,00 | 70,00 | 75,04 | 80,04 | 85,04 | 90,04 | 95,04 | 100,04 | 110,04 | 120,04 |
| | | | 6 | 60,15 | 65,15 | 70,15 | 75,20 | 80,20 | 85,20 | 90,20 | 95,20 | 100,20 | 110,20 | 120,20 |
| | | | 7 | 60,30 | 65,30 | 70,30 | 75,36 | 80,36 | 85,36 | 90,36 | 95,36 | 100,36 | 110,36 | 120,36 |
| | | | 8 | 60,45 | 65,45 | 70,45 | 75,52 | 80,52 | 85,52 | 90,52 | 95,52 | 100,52 | 110,52 | 120,52 |
| | | | 9 | 60,60 | 65,60 | 70,60 | 75,68 | 80,68 | 85,68 | 90,68 | 95,68 | 100,68 | 110,68 | 120,68 |
| | | | 10 | 60,75 | 65,75 | 70,75 | 75,84 | 80,84 | 85,84 | 90,84 | 95,84 | 100,84 | 110,84 | 120,84 |
| | | | 11 | 60,90 | 65,90 | 70,90 | 76,00 | 81,00 | 86,00 | 91,00 | 96,00 | 101,00 | 111,00 | 121,00 |
| | | | 12 | 61,05 | 66,05 | 71,05 | 76,16 | 81,16 | 86,16 | 91,16 | 96,16 | 101,16 | 111,16 | 121,16 |
| | | | 13 | 61,20 | 66,20 | 71,20 | 76,32 | 81,32 | 86,32 | 91,32 | 96,32 | 101,32 | 111,32 | 121,32 |
| | круглых | чисто-вых | 14 | 59,61 | 66,35 | 71,35 | 76,48 | 79,61 | 86,48 | 91,48 | 94,61 | 99,61 | 111,48 | 119,61 |
| | | | 15 | 59,76 | 64,61 | 69,61 | 74,61 | 79,76 | 84,61 | 89,61 | 94,77 | 99,77 | 109,61 | 119,77 |
| | | | 16 | 59,91 | 64,76 | 69,76 | 74,76 | 79,91 | 84,77 | 89,77 | 94,93 | 99,93 | 109,77 | 119,93 |
| | | | 17 | 60,06 | 64,91 | 69,91 | 74,91 | 80,06 | 84,93 | 89,93 | 95,09 | 100,09 | 109,93 | 120,09 |
| | | | 18 | 60,13 | 65,06 | 70,06 | 75,06 | 80,13 | 85,09 | 90,09 | 95,16 | 100,16 | 110,09 | 120,16 |
| | | | 19 | 60,16 | 65,13 | 70,13 | 75,13 | 80,16 | 85,16 | 90,16 | 95,19 | 100,19 | 110,16 | 120,19 |
| | | калибрующих | 20 | 60,16 | 65,16 | 70,16 | 75,16 | 80,16 | 85,19 | 90,19 | 95,19 | 100,19 | 110,19 | 120,19 |
| | | | 21 | | | | | | | | | | | |
| | | | 22 | | 65,16 | 70,16 | 75,16 | | 85,19 | 90,19 | | | 110,19 | |
| | шлицевых | черновых | 23 | 61,38 | | | | 81,50 | | | 96,48 | 101,48 | | 121,48 |
| | | | 24 | 61,56 | 66,53 | 71,53 | 76,66 | 81,68 | 86,66 | 91,64 | 96,64 | 101,64 | 111,64 | 121,64 |
| | | | 25 | 61,74 | 66,71 | 71,71 | 76,84 | 81,86 | 86,84 | 91,80 | 96,80 | 101,80 | 111,80 | 121,80 |
| | | | 26 | 61,92 | 66,89 | 71,89 | 77,02 | 82,04 | 87,02 | 91,96 | 96,96 | 101,96 | 111,96 | 121,96 |

*Продолжение табл. 4*

Размеры, мм

| Обозначение протяжки | | | | 2403 3789 | 2403-3793 | 2403-3796 | 2403-3799 | 2403-3803 | 2403-3806 | 2403-3809 | 2403-3813 | 2403-3816 | 2403-3819 | 2403-3823 |
|---|---|---|---|---|---|---|---|---|---|---|---|---|---|---|
| $D \times m$ | | | | 70×5 | 75×5 | 80×5 | 85×5 | 90×5 | 95×5 | 100×5 | 105×5 | 110×5 | 120×5 | 130×5 |
| Номера и диаметры $D_i$ зубьев | шлицевых | черновых | 27 | 62,10 | 67,07 | 72,07 | 77,20 | 82,22 | 87,20 | 92,12 | 97,12 | 102,12 | 112,12 | 122,12 |
| | | | 28 | 62,28 | 67,25 | 72,25 | 77,38 | 82,40 | 87,38 | 92,28 | 97,28 | 102,28 | 112,28 | 122,28 |
| | | | 29 | 62,46 | 67,43 | 72,43 | 77,56 | 82,58 | 87,56 | 92,44 | 97,44 | 102,44 | 112,44 | 122,44 |
| | | | 30 | 62,64 | 67,61 | 72.61 | 77,74 | 82,76 | 87,74 | 92,60 | 97,60 | 102,60 | 112,60 | 122,60 |
| | | | 31 | 62,82 | 67,79 | 72,79 | 77,92 | 82,94 | 87,92 | 92,76 | 97,76 | 102,76 | 112,76 | 122,76 |
| | | | 32 | 63,00 | 67,97 | 72,97 | 78,10 | 83,12 | 88,10 | 92,92 | 97,92 | 102,92 | 112,92 | 122,92 |
| | | | 33 | 63,18 | 68,15 | 73,15 | 78,28 | 83,30 | 88,28 | 93,08 | 98,08 | 103,08 | 113,08 | 123,08 |
| | | | 34 | 63,36 | 68,33 | 73,33 | 78,46 | 83,48 | 88,46 | 93,24 | 98,24 | 103,24 | 113,24 | 123,24 |
| | | | 35 | 63,54 | 68,51 | 73,51 | 78,64 | 83,66 | 88,64 | 93,40 | 98,40 | 103,40 | 113,40 | 123,40 |
| | | | 36 | 63,72 | 68,69 | 73,69 | 78,82 | 83,84 | 88,82 | 93,56 | 98,56 | 103,56 | 113,56 | 123,56 |
| | | | 37 | 63,90 | 68,87 | 73,87 | 79,00 | 84,02 | 89,00 | 93,72 | 98,72 | 103,72 | 113,72 | 123,72 |
| | | | 38 | 64,08 | 69,05 | 74,05 | 79,18 | 84,20 | 89,18 | 93,88 | 98,88 | 103,88 | 113,88 | 123,88 |
| | | | 39 | 64,26 | 69,23 | 74,23 | 79,36 | 84,38 | 89,36 | 94,04 | 99,04 | 104,04 | 114,04 | 124,04 |
| | | | 40 | 64,44 | 69,41 | 74,41 | 79,54 | 84,56 | 89,54 | 94,20 | 99,20 | 104,20 | 114,20 | 124,20 |
| | | | 41 | 64,62 | 69,59 | 74,59 | 79,72 | 84,74 | 89,72 | 94,36 | 99,36 | 104,36 | 114,36 | 124,36 |
| | | | 42 | 64,80 | 69,77 | 74,77 | 79,90 | 84,92 | 89,90 | 94,52 | 99,52 | 104,52 | 114,52 | 124,52 |
| | | | 43 | 64,98 | 69,95 | 74,95 | 80,08 | 85,10 | 90,08 | 94,68 | 99,68 | 104,68 | 114,68 | 124,68 |
| | | | 44 | 65,16 | 70,13 | 75,13 | 80,26 | 85,28 | 90,26 | 94,84 | 99,84 | 104,84 | 114,84 | 124,84 |
| | | | 45 | 65,34 | 70,31 | 75,31 | 80,44 | 85,46 | 90,44 | 95,00 | 100,00 | 105,00 | 115,00 | 125,00 |
| | | | 46 | 65,52 | 70,49 | 75,49 | 80,62 | 85,64 | 90,62 | 95,16 | 100,16 | 105,16 | 115,16 | 125,16 |
| | | | 47 | 65,70 | 70,67 | 75,67 | 80,80 | 85,82 | 90,80 | 95,32 | 100,32 | 105,32 | 115,32 | 125,32 |
| | | | 48 | 65,88 | 70,85 | 75,85 | 80,98 | 86,00 | 90,98 | 95,48 | 100,48 | 105,48 | 115,48 | 125,48 |
| | | | 49 | 66,06 | 71,03 | 76,03 | 81,16 | 86,18 | 91,16 | 95,64 | 100,64 | 105,64 | 115,64 | 125,64 |
| | | | 50 | 66,24 | 71,21 | 76,21 | 81,34 | 86,36 | 91,34 | 95,80 | 100,80 | 105,80 | 115,80 | 125,80 |
| | | | 51 | 66,42 | 71,39 | 76,39 | 81,52 | 86,54 | 91,52 | 95,96 | 100,96 | 105,96 | 115,96 | 125,96 |

*Продолжение табл. 4*

Размеры, мм

| Обозначение протяжки | | | 2403-3789 | 2403-3793 | 2403-3796 | 2403-3799 | 2403-3803 | 2403-3806 | 2403-3809 | 2403-3813 | 2403-3816 | 2403-3819 | 2403-3823 |
|---|---|---|---|---|---|---|---|---|---|---|---|---|---|
| $D \times m$ | | | 70×5 | 75×5 | 80×5 | 85×5 | 90×5 | 95×5 | 100×5 | 105×5 | 110×5 | 120×5 | 130×5 |
| Номера и диаметры $D_i$ зубьев шлицевых | черновых | 52 | 66,60 | 71,57 | 76,57 | 81,70 | 86,72 | 91,70 | 96,12 | 101,12 | 106,12 | 116,12 | 126,12 |
| | | 53 | 66,78 | 71,75 | 76,75 | 81,88 | 86,90 | 91,88 | 96,28 | 101,28 | 106,28 | 116,28 | 126,28 |
| | | 54 | 66,96 | 71,93 | 76,93 | 82,06 | 87,08 | 92,06 | 96,44 | 101,44 | 106,44 | 116,44 | 126,44 |
| | | 55 | 67,14 | 72,11 | 77,11 | 82,24 | 87,26 | 92,24 | 96,60 | 101,60 | 106,60 | 116,60 | 126,60 |
| | | 56 | 67,32 | 72,29 | 77,29 | 82,42 | 87,44 | 92,42 | 96,76 | 101,76 | 106,76 | 116,76 | 126,76 |
| | | 57 | 67,50 | 72,47 | 77,47 | 82,60 | 87,62 | 92,60 | 96,92 | 101,92 | 106,92 | 116,92 | 126,92 |
| | | 58 | 67,68 | 72,65 | 77,65 | 82,78 | 87,80 | 92,78 | 97,08 | 102,08 | 107,08 | 117,08 | 127,08 |
| | | 59 | 67,86 | 72,83 | 77,83 | 82,96 | 87,98 | 92,96 | 97,24 | 102,24 | 107,24 | 117,24 | 127,24 |
| | | 60 | 68,04 | 73,01 | 78,01 | 83,14 | 88,16 | 93,14 | 97,40 | 102,40 | 107,40 | 117,40 | 127,40 |
| | | 61 | 68,22 | 73,19 | 78,19 | 83,32 | 88,34 | 93,32 | 97,56 | 102,56 | 107,56 | 117,56 | 127,56 |
| | | 62 | 68,40 | 73,37 | 78,37 | 83,50 | 88,52 | 93,50 | 97,72 | 102,72 | 107,72 | 117,72 | 127,72 |
| | | 63 | 68,58 | 73,55 | 78,55 | 83,68 | 88,70 | 93,68 | 97,88 | 102,88 | 107,88 | 117,88 | 127,88 |
| | | 64 | 68,76 | 73,73 | 78,73 | 83,86 | 88,88 | 93,86 | 98,04 | 103,04 | 108,04 | 118,04 | 128,04 |
| | | 65 | 68,94 | 73,91 | 78,91 | 84,04 | 89,06 | 94,04 | 98,20 | 103,20 | 108,20 | 118,20 | 128,20 |
| | | 66 | 69,12 | 74,09 | 79,09 | 84,22 | 89,24 | 94,22 | 98,36 | 103,36 | 108,36 | 118,36 | 128,36 |
| | | 67 | 69,30 | 74,27 | 79,27 | 84,40 | 89,42 | 94,40 | 98,52 | 103,52 | 108,52 | 118,52 | 128,52 |
| | | 68 | 69,48 | 74,45 | 79,45 | 84,58 | 89,60 | 94,58 | 98,68 | 103,68 | 108,68 | 118,68 | 128,68 |
| | | 69 | 69,66 | 74,63 | 79,63 | 84,76 | 89,78 | 94,76 | 98,84 | 103,84 | 108,84 | 118,84 | 128,84 |
| | калибрующих | 70 | 69,66 | 74,63 | 79,63 | 84,76 | 89,78 | 94,76 | 99,00 | 104,00 | 109,00 | 119,00 | 129,00 |
| | | 71 | | | | | | | 99,16 | 104,16 | 109,16 | 119,16 | 129,16 |
| | | 72 | | | | | | | 99,32 | 104,32 | 109,32 | 119,32 | 129,32 |
| | | 73 | | | | | | | 99,48 | 104,48 | 109,48 | 119,48 | 129,48 |
| | | 74 | — | — | — | — | — | — | 99,64 | 104,64 | 109,64 | 119,64 | 129,64 |
| | | 75 | | | | | | | 99,64 | 104,64 | 109,64 | 119,64 | 129,64 |
| | | 76 | | | | | | | | | | | |

**Протяжки 2-го прохода**

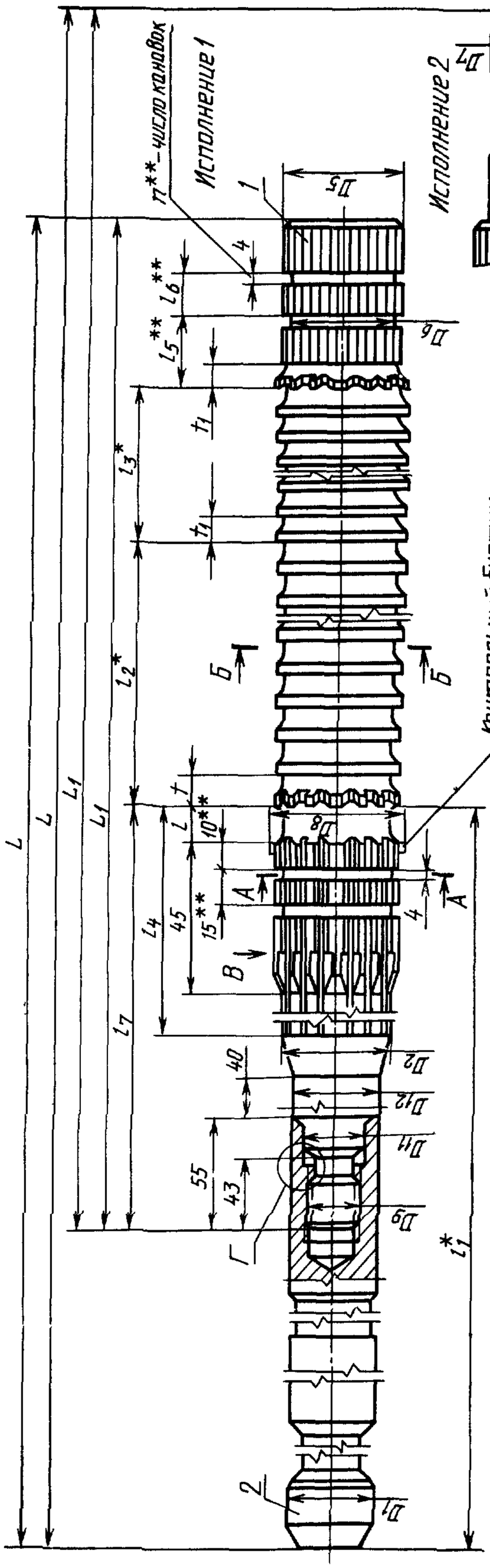


Черт. 2

* Размеры для справок.

** Размеры и параметр — рекомендуемые.

Таблица 5

Размеры, мм

| Обозначение протяжки исполнения | | Применяемость | | $D \times m$ | $z$ | Сочетание полей допусков $D$ и $e$ | $S$ | $D_1$ | $D_2$ | $D_3$ | $D_4$, не более | $D_5$ | $D_6$ | $D_7$ | $D_8$ | $D_9$ | $D_{10}$ | $D_{11}$ | $D_{12}$ |
|---|---|---|---|---|---|---|---|---|---|---|---|---|---|---|---|---|---|---|---|
| 1 | 2 | 1 | 2 | | | | | | | | | | | | | | | | |
| — | 2403-3571 | | | 70×3 | 22 | H7—9H | 5,197 | 63 | 64 | 69,49 | 63,4 | 69,3 | 61 | 50 | 70,2 | M48×3 | 43,5 | 50 | 63 |
| — | 2403-3572 | | | | | H8—11H | 5,277 | | | | | | | | | | | | |
| — | 2403-3574 | | | 75×3 | 24 | H7—9H | 4,619 | | 69 | 74,49 | 68,4 | 74,3 | 66 | | 74,4 | | | | — |
| — | 2403-3575 | | | | | H8—11H | 4,699 | | | | | | | | | | | | |
| 2403-3577 | 2403-3581 | | | 80×3 | 25 | H7—9H | 5,774 | | 74 | 79,54 | 73,4 | 79,3 | 71 | | 80,0 | | | | |
| 2403-3578 | 2403-3582 | | | | | H8—11H | 5,854 | | | | | | | | | | | | |
| 2403-3584 | 2403-3587 | | | 85×3 | 27 | H7—9H | 5,197 | | 79 | 84,54 | 78,4 | 84,3 | 76 | | 85,4 | | | | |
| 2403-3585 | 2403-3588 | | | | | H8—11H | 5,277 | | | | | | | | | | | | |
| 2403-3591 | 2403-3594 | | | 90×3 | 28 | H7—9H | 6,351 | | 84 | 89,54 | 83,4 | 89,3 | 81 | | 90,0 | | | | |
| 2403-3592 | 2403-3595 | | | | | H8—11H | 6,431 | | | | | | | | | | | | |
| 2403-3597 | 2409-3601 | | | 95×3 | 30 | H7—9H | 5,774 | | 89 | 94,54 | 88,4 | 94,3 | 86 | | 95,2 | | | | |
| 2403-3598 | 2403-3602 | | | | | H8—11H | 5,854 | | | | | | | | | | | | |
| 2403-3604 | 2403-3607 | | | 100×3 | 32 | H7—9H | 5,197 | | 94 | 99,61 | 93,4 | 99,3 | 91 | | 99,3 | | | | 70 |
| 2403-3605 | 2403-3608 | | | | | H8—11H | 5,277 | | | | | | | | | | | | |
| 2403-3611 | 2403-3614 | | | 105×3 | 34 | H7—9H | 4,629 | | 99 | 104,60 | 98,4 | 104,3 | 96 | | 104,6 | | | | |
| 2403-3612 | 2403-3615 | | | | | H8—11H | 4,719 | | | | | | | | | | | | |
| 2403-3617 | — | | | 110×3 | 35 | H7—9H | 5,784 | | 104 | 109,60 | 103,4 | 109,3 | 101 | | 109,2 | | | | |
| 2403-3618 | — | | | | | H8—11H | 5,874 | | | | | | | | | | | | |
| 2403-3621 | — | | | 120×3 | 38 | H7—9H | 6,361 | 70 | 114 | 119,61 | 113,4 | 119,3 | 111 | — | 120,3 | | | | |
| 2403-3622 | — | | | | | H8—11H | 6,451 | | | | | | | | | | | | |
| 2403-3624 | — | | | 130×3 | 42 | H7—9H | 5,207 | | 124 | 129,58 | 123,4 | 129,3 | 121 | | 129,5 | | | | |
| 2403-3625 | — | | | | | H8—11H | 5,297 | | | | | | | | | | | | |
| 2403-3627 | 2403-3631 | | | 55×3,5 | 14 | H7—9H | 6,810 | 45 | 48 | 54,61 | 41,4 | 54,3 | 45 | 36 | 54,4 | M30×2 | 27,0 | 32 | 45 |
| 2403-3628 | 2403-3632 | | | | | H8—11H | 6,879 | | | | | | | | | | | | |
| 2403-3634 | 2403-3637 | | | 60×3,5 | 16 | H7—9H | 5,664 | 50 | 53 | 59,63 | 52,4 | 59,3 | 50 | 50 | 60,2 | M36×3 | 31,5 | 38 | 50 |
| 2403-3635 | 2403-3638 | | | | | H8—11H | 5,744 | | | | | | | | | | | | |
| 2403-3641 | 2403-3644 | | | 65×3,5 | 18 | H7—9H | 4,510 | | 58 | 64,49 | 57,4 | 64,3 | 55 | | 64,8 | | | | |
| 2403-3642 | 2403-3645 | | | | | H8—11H | 4,590 | | | | | | | | | | | | |

*Продолжение табл. 5*

Размеры, мм

| Обозначение протяжки исполнения | | $L$ для исполнения | | $L_1$ для исполнения | | $l$ | $l_1$ | $l_2$ | $l_3$ | $l_4$ | $l_5$ | $l_6$ | $l_7$ | Черновые и переходные зубья | | | Чистовые и калибрующие зубья (число зубьев—10) | | $F$, не более | $c$ для исполнения | | $n$ | $l_8$ |
|---|---|---|---|---|---|---|---|---|---|---|---|---|---|---|---|---|---|---|---|---|---|---|---|
| 1 | 2 | 1 | 2 | 1 | 2 | | | | | | | | | Число | $t$ | Номер профиля | $t_1$ | Номер профиля | | 1 | 2 | | |
| — | 2403-3571 | | | | | | | | | | | | | | | | | | | | | | |
| — | 2403-3572 | — | 1215 | — | 1000 | | 450 | | | 95 | | | 235 | | | | | | | — | 0,250 | 4 | |
| — | 2403-3574 | | | | | | | | | | | | | | | | | | | | | | |
| — | 2403-3575 | | | | | | | | | | | | | | | | | | | | | | |
| 2403-3577 | 2403-3581 | | | | | | | | | | | | | | | | | | | | | | |
| 2403-3578 | 2403-3582 | | | | | | | | | | | | | | | | | | | | | | |
| 2403-3584 | 2403-3587 | | | | | | | | | | | | | | | | | | | | | | |
| 2403-3585 | 2403-3588 | | | | | | | | | | | | | | | | | | | | | | |
| 2403-3591 | 2403-3594 | 1140 | 1265 | 900 | 1025 | | 490 | | | 110 | 25 | 14 | 250 | | | | | | | 0,225 | 0,256 | | 125 |
| 2403-3592 | 2403-3595 | | | | | | | 464 | | | | | | 29 | | | | | 0,24 | | | | |
| 2403-3597 | 2403-3601 | | | | | | | | | | | | | | | | | | | | | | |
| 2403-3598 | 2403-3602 | | | | | | | | | | | | | | | | | | | | | | |
| 2403-3604 | 2403-3607 | | | | | | | | | | | | | | | | | | | | | | |
| 2403-3605 | 2403-3608 | | 1240 | | 1000 | 16 | | | 99 | | | | | | | | | | | | | 5 | |
| 2403-3611 | 2403-3614 | | | | | | 465 | | | | | | 225 | | 16 | 11 | 11 | 8 | | | 0,250 | | |
| 2403-3612 | 2403-3615 | | | | | | | | | 95 | | | | | | | | | | | | | |
| 2403-3617 | — | | | | | | | | | | | | | | | | | | | | | | |
| 2403-3618 | — | 1115 | | | | | | | | | | | | | | | | | | | | | |
| 2403-3621 | — | | — | 875 | — | | 470 | | | | 24 | 13 | 230 | | | | | | | 0,219 | — | | — |
| 2403-3622 | — | | | | | | | | | | | | | | | | | | | | | | |
| 2403-3624 | — | | | | | | 465 | | | | | | 225 | | | | | | | | | | |
| 2403-3625 | — | | | | | | | | | | 25 | 14 | | | | | | | | | | | |
| 2403-3627 | 2403-3631 | 1075 | 1200 | | 1000 | | | 480 | | | | | | 30 | | | | | | | 0,250 | 4 | |
| 2403-3628 | 2403-3632 | | | | | | | | | 80 | | | | | | | | | | | | | |
| 2403-3634 | 2403-3637 | | | | | | 420 | | | | | | 220 | | | | | | 0,28 | | | | 125 |
| 2403-3635 | 2403-3638 | 1100 | 1225 | 900 | 1025 | | | 496 | | | 24 | 13 | | 31 | | | | | | 0,225 | 0,256 | 5 | |
| 2403-3641 | 2403-3644 | | | | | | | | | | | | | | | | | | | | | | |
| 2403-3642 | 2403-3645 | | | | | | | | | | | | | | | | | | | | | | |

Размеры, мм

| Обозначение протяжки исполнения | | Применяемость | | $D \times m$ | $z$ | Сочетание полей допусков $D$ и $e$ | $S$ | $D_1$ | $D_2$ | $D_3$ | $D_4$, не более | $D_5$ | $D_6$ | $D_7$ | $D_8$ | $D_9$ | $D_{10}$ | $D_{11}$ | $D_{12}$ |
|---|---|---|---|---|---|---|---|---|---|---|---|---|---|---|---|---|---|---|---|
| 1 | 2 | 1 | 2 | | | | | | | | | | | | | | | | |
| 2403-3647 | 2403-3651 | — | — | 70×3,5 | 18 | H7—9H | 7,396 | 50 | 63 | 69,63 | 62,4 | 69,3 | 60 | 50 | 69,8 | M36×3 | 31,5 | 38 | 50 |
| 2403-3648 | 2403-3652 | — | — | | | H8—11H | 7,476 | | | | | | | | | | | | |
| 2403-3654 | 2403-3657 | — | — | 75×3,5 | 20 | H7—9H | 6,242 | 63 | 68 | 74,60 | 67,4 | 74,3 | 65 | | 75,3 | | | | 63 |
| 2403-3655 | 2403-3658 | — | — | | | H8—11H | 6,322 | | | | | | | | | | | | |
| 2403-3661 | 2403-3664 | — | — | 80×3,5 | 22 | H7—9H | 5,087 | | 73 | 79,60 | 72,4 | 79,3 | 70 | | 79,7 | | | | |
| 2403-3662 | 2403-3665 | — | — | | | H8—11H | 5,167 | | | | | | | | | | | | |
| 2403-3667 | 2403-3671 | — | — | 85×3,5 | 24 | H7—9H | 3,932 | | 78 | 84,62 | 77,4 | 84,3 | 75 | | 85,2 | | | | |
| 2403-3668 | 2403-3672 | — | — | | | H8—11H | 4,012 | | | | | | | | | | | | |
| 2403-3674 | 2403-3677 | — | — | 90×3,5 | | H7—9H | 6,819 | | 83 | 89,62 | 82,4 | 89,3 | 80 | | 90,4 | | | | |
| 2403-3675 | 2403-3678 | — | — | | | H8—11H | 6,899 | | | | | | | | | | | | |
| 2403-3681 | 2403-3684 | — | — | 95×3,5 | 26 | H7—9H | 5,664 | | 88 | 94,62 | 87,4 | 94,3 | 85 | | 94,5 | | | | |
| 2403-3682 | 2403-3685 | — | — | | | H8—11H | 5,744 | | | | | | | | | | | | |
| 2403-3687 | — | — | — | 100×3,5 | 28 | H7—9H | 4,510 | | 93 | 99,62 | 92,4 | 99,3 | 90 | | 100,0 | M48×3 | 43,5 | 50 | 70 |
| 2403-3688 | — | — | — | | | H8—11H | 4,590 | | | | | | | | | | | | |
| 2403-3691 | — | — | — | 105×3,5 | 29 | H7—9H | 5,386 | | 98 | 104,62 | 97,4 | 104,3 | 95 | | 104,8 | | | | |
| 2403-3692 | — | — | — | | | H8—11H | 5,476 | | | | | | | | | | | | |
| 2403-3694 | — | — | — | 110×3,5 | 30 | H7—9H | 6,252 | | 103 | 109,62 | 102,4 | 109,3 | 100 | — | 109,4 | | | | |
| 2403-3695 | — | — | — | | | H8—11H | 6,342 | | | | | | | | | | | | |
| 2403-3697 | — | — | — | 120×3,5 | 34 | H7—9H | 3,942 | 70 | 113 | 119,49 | 112,4 | 119,3 | 110 | | 120,3 | | | | |
| 2403-3698 | — | — | — | | | H8—11H | 4,032 | | | | | | | | | | | | |
| 2403-3701 | — | — | — | 130×3,5 | 36 | H7—9H | 5,674 | | 123 | 129,63 | 122,4 | 129,3 | 120 | | 129,8 | | | | |
| 2403-3702 | — | — | — | | | H8—11H | 5,764 | | | | | | | | | | | | |
| — | 2403-3704 | — | — | 60×4 | 13 | H7—9H | 8,442 | 50 | 52 | 59,50 | 51,2 | 59,2 | 49 | 50 | 59,3 | M36×3 | 31,5 | 38 | 50 |
| — | 2403-3705 | — | — | | | H8—11H | 8,522 | | | | | | | | | | | | |
| 2403-3707 | — | — | — | | | H7—9H | 8,442 | | | | | | | — | | | | | |
| 2403-3708 | — | — | — | | | H8—11H | 8,522 | | | | | | | | | | | | |
| — | 2403 3711 | — | — | 65×4 | 15 | H7—9H | 6,710 | | 57 | 64,50 | 56,2 | 64,2 | 51 | 50 | 65,3 | | | | |
| — | 2403-3712 | — | — | | | H8—11H | 6,790 | | | | | | | — | | | | | |
| 2403-3714 | — | — | — | | | H7—9H | 6,710 | | | | | | | — | | | | | |
| 2403-3715 | — | — | — | | | H8—11H | 6,790 | | | | | | | | | | | | |

*Продолжение табл. 5*

Размеры, мм

| Обозначение протяжки исполнения | | $L$ для исполнения | | $L_1$ для исполнения | | $l$ | $l_1$ | $l_2$ | $l_3$ | $l_4$ | $l_5$ | $l_6$ | $l_7$ | Черновые и переходные зубья | | | Чистовые и калибрующие зубья (число зубьев—10) | | $F$, не более | $c$ для исполнения | | $n$ | $l_8$ |
|---|---|---|---|---|---|---|---|---|---|---|---|---|---|---|---|---|---|---|---|---|---|---|---|
| 1 | 2 | 1 | 2 | 1 | 2 | | | | | | | | | Число | $t$ | Номер профиля | $t_1$ | Номер профиля | | 1 | 2 | | |
| 2403-3647 | 2403-3651 | 1100 | 1225 | 900 | 1025 | 16 | 415 | 496 | 99 | 80 | 25 | 14 | 215 | 31 | 16 | 11 | 11 | 8 | 0,28 | 0,225 | 0,256 | 5 | 125 |
| 2403-3648 | 2403-3652 | | | | | | | | | | | | | | | | | | | | | | |
| 2403-3654 | 2403-3657 | 1090 | 1215 | 875 | 1000 | | 440 | 480 | | 90 | 24 | 13 | 225 | 30 | | | | | | 0,219 | 0,250 | 4 | |
| 2403-3655 | 2403-3658 | | | | | | | | | | | | | | | | | | | | | | |
| 2403-3661 | 2403-3664 | 1115 | 1240 | 900 | 1025 | | | 496 | | | 23 | 12 | | 31 | | | | | | 0,225 | 0,256 | 5 | |
| 2403-3662 | 2403-3665 | | | | | | | | | | | | | | | | | | | | | | |
| 2403-3667 | 2403-3671 | | | 875 | 1000 | | | 480 | | | 25 | 14 | | 30 | | | | | | 0,219 | 0,250 | 4 | |
| 2403-3668 | 2403-3672 | | | | | | | | | | | | | | | | | | | | | | |
| 2403-3674 | 2403-3677 | | | | | | | | | | | | | | | | | | | | | | |
| 2403-3675 | 2403-3678 | | | | | | | | | | | | | | | | | | | | | | |
| 2403-3681 | 2403-3684 | 1140 | 1265 | 900 | 1025 | | 460 | 496 | | 95 | 24 | 13 | 220 | 31 | | | | | | 0,225 | 0,256 | 5 | |
| 2403-3682 | 2403-3685 | | | | | | | | | | | | | | | | | | | | | | |
| 2403-3687 | — | 1115 | — | 875 | — | | | 480 | | | 25 | 14 | | 30 | | | | | | 0,219 | — | 4 | — |
| 2403-3688 | — | | | | | | | | | | | | | | | | | | | | | | |
| 2403-3691 | — | 1140 | | 900 | | | | 496 | | | 24 | 13 | 245 | 31 | | | | | | 0,225 | | 5 | |
| 2403-3692 | — | | | | | | | | | | | | | | | | | | | | | | |
| 2403-3694 | — | | | | | | | | | | | | | | | | | | | | | | |
| 2403-3695 | — | | | | | | | | | | | | | | | | | | | | | | |
| 2403-3697 | — | 1165 | | 925 | | | 485 | | | | | | | | | | | | | 0,231 | | | |
| 2403-3698 | — | | | | | | | | | | | | | | | | | | | | | | |
| 2403-3701 | — | 1140 | | 900 | | | 475 | | | | | | 235 | | | | | | | 0,225 | | 4 | |
| 2403-3702 | — | | | | | | | | | | | | | | | | | | | | | | |
| — | 2403-3704 | — | 1225 | — | 1050 | 18 | 400 | 546 | | 80 | 23 | 12 | 225 | 39 | 14 | 10 | | | 0,32 | — | 0,262 | 3 | 125 |
| — | 2403-3705 | | | | | | | | | | | | | | | | | | | | | | |
| 2403-3707 | — | 1125 | — | 925 | — | | 420 | 528 | | | | | 220 | 33 | 16 | 11 | | | | 0,231 | — | 5 | — |
| 2403-3708 | — | | | | | | | | | | | | | | | | | | | | | | |
| — | 2403-3711 | — | 1225 | — | 1050 | | 400 | 532 | | | | | 225 | 38 | 14 | 10 | | | | — | 0,262 | 4 | 125 |
| — | 2403-3712 | | | | | | | | | | | | | | | | | | | | | | |
| 2403-3714 | — | 1125 | — | 925 | — | | 420 | 528 | | | | | 220 | 33 | 16 | 11 | | | | 0,231 | — | 5 | — |
| 2403-3715 | — | | | | | | | | | | | | | | | | | | | | | | |

*Продолжение табл. 5*

Размеры, мм

| Обозначение протяжки исполнения | | Применяемость | | $D \times m$ | $z$ | Сочетание полей допусков $D$ и $e$ | $S$ | $D_1$ | $D_2$ | $D_3$ | $D_4$, не более | $D_5$ | $D_6$ | $D_7$ | $D_8$ | $D_9$ | $D_{10}$ | $D_{11}$ | $D_{12}$ |
|---|---|---|---|---|---|---|---|---|---|---|---|---|---|---|---|---|---|---|---|
| 1 | 2 | 1 | 2 | | | | | | | | | | | | | | | | |
| — | 2403-3717 | | | 70×4 | 16 | H7—9H | 7,287 | 50 | 62 | 69,53 | 61,2 | 69,2 | 59 | 50 | 70,0 | M36×3 | 31,5 | 38 | 50 |
| — | 2403-3718 | | | | | H8—11H | 7,367 | | | | | | | — | | | | | |
| 2403-3721 | — | | | | | H7—9H | 7,287 | | | | | | | | | | | | |
| 2403-3722 | — | | | | | H8—11H | 7,367 | | | | | | | | | | | | |
| — | 2403-3724 | | | 75×4 | 17 | H7—9H | 7,864 | | 67 | 74,50 | 66,2 | 74,2 | 64 | 50 | 75,0 | | | | 63 |
| — | 2403-3725 | | | | | H8—11H | 7,944 | | | | | | | — | | | | | |
| 2403-3727 | — | | | | | H7—9H | 7,864 | | | | | | | | | | | | |
| 2403-3728 | — | | | | | H8—11H | 7,944 | | | | | | | | | | | | |
| — | 2403-3731 | | | 80×4 | 18 | H7—9H | 8,442 | | 72 | 79,50 | 71,2 | 79,2 | 69 | 50 | 79,7 | | | | |
| — | 2403-3732 | | | | | H8—11H | 8,522 | | | | | | | — | | | | | |
| 2403-3734 | — | | | | | H7—9H | 8,442 | | | | | | | | | | | | |
| 2403-3735 | — | | | | | H8—11H | 8,522 | | | | | | | | | | | | |
| — | 2403-3737 | | | 85×4 | 20 | H7—9H | 6,710 | | 77 | 84,50 | 76,2 | 84,2 | 74 | 50 | 84,8 | | | | |
| — | 2403-3738 | | | | | H8—11H | 6,790 | | | | | | | — | | | | | |
| 2403-3741 | — | | | | | H7—9H | 6,710 | | | 84,58 | | | | | | | | | |
| 2403-3742 | — | | | | | H8—11H | 6,790 | 63 | | | | | | | | M48×3 | 43,5 | 50 | 70 |
| — | 2403-3744 | | | 90×4 | 21 | H7—9H | 7,287 | | 82 | 89,50 | 81,2 | 89,2 | 79 | 50 | 89,6 | | | | |
| — | 2403-3745 | | | | | H8—11H | 7,367 | | | | | | | — | | | | | |
| 2403-3747 | — | | | | | H7—9H | 7,287 | | | 89,58 | | | | | | | | | |
| 2403-3748 | — | | | | | H8—11H | 7,367 | | | | | | | | | | | | |
| — | 2403-3751 | | | 95×4 | 22 | H7—9H | 7,864 | | 87 | 94,50 | 86,2 | 94,2 | 84 | 50 | 94,4 | | | | |
| — | 2403-3752 | | | | | H8—11H | 7,944 | | | | | | | — | | | | | |
| 2403-3754 | — | | | | | H7—9H | 7,864 | | | 94,58 | | | | | | | | | |
| 2403-3755 | — | | | | | H8—11H | 7,944 | | | | | | | | | | | | |
| — | 2403-3757 | | | 100×4 | 24 | H7—9H | 6,132 | | 92 | 99,50 | 91,2 | 99,2 | 89 | 50 | 100,3 | | | | |
| — | 2403-3758 | | | | | H8—11H | 6,212 | | | | | | | — | | | | | |
| 2403-3761 | — | | | | | H7—9H | 6,132 | | | | | | | | | | | | |
| 2403-3762 | — | | | | | H8—11H | 6,212 | | | | | | | | | | | | |

*Продолжение табл. 5*

Размеры, мм

| Обозначение протяжки исполнения | | $L$ для исполнения | | $L_1$ для исполнения | | $l$ | $l_1$ | $l_2$ | $l_3$ | $l_4$ | $l_5$ | $l_6$ | $l_7$ | Черновые и переходные зубья | | | Чистовые и калибрующие зубья (число зубьев—10) | | $F$, не более | $c$ для исполнения | | $n$ | $l_8$ |
|---|---|---|---|---|---|---|---|---|---|---|---|---|---|---|---|---|---|---|---|---|---|---|---|
| 1 | 2 | 1 | 2 | 1 | 2 | | | | | | | | | Число | $t$ | Номер профиля | $t_1$ | Номер профиля | | 1 | 2 | | |
| — | 2403-3717 | — | 1200 | — | 1025 | 18 | 390 | 532 | 99 | 80 | 22 | 11 | 215 | 38 | 14 | 10 | 11 | 8 | 0,32 | — | 0,256 | 3 | 125 |
| — | 2403-3718 | | | | | | | | | | | | | | | | | | | | | | |
| 2403-3721 | — | 1150 | — | 950 | — | | 435 | 528 | | | 25 | 14 | 235 | 33 | 16 | 11 | | | | 0,238 | — | 5 | — |
| 2403-3722 | — | | | | | | | | | | | | | | | | | | | | | | |
| — | 2403-3724 | — | 1240 | — | 1025 | | 415 | 546 | | | 23 | 12 | 200 | 39 | 14 | 10 | | | | — | 0,256 | 3 | 125 |
| — | 2403-3725 | | | | | | | | | | | | | | | | | | | | | | |
| 2403-3727 | — | 1140 | — | 925 | — | | 440 | 512 | | 90 | 25 | 14 | 225 | 32 | 16 | 11 | | | | 0,231 | — | 5 | — |
| 2403-3728 | — | | | | | | | | | | | | | | | | | | | | | | |
| — | 2403-3731 | — | 1240 | — | 1025 | | 415 | 532 | | 80 | 23 | 12 | 200 | 38 | 14 | 10 | | | | — | 0,256 | 4 | 125 |
| — | 2403-3732 | | | | | | | | | | | | | | | | | | | | | | |
| 2403-3734 | — | 1140 | — | 925 | — | | 440 | 512 | | 90 | 25 | 14 | 225 | 32 | 16 | 11 | | | | 0,231 | — | 5 | — |
| 2403-3735 | — | | | | | | | | | | | | | | | | | | | | | | |
| — | 2403-3737 | — | 1265 | — | 1025 | | 435 | 546 | | 80 | 24 | 13 | 195 | 39 | 14 | 10 | | | | — | 0,256 | 3 | 125 |
| — | 2403-3738 | | | | | | | | | | | | | | | | | | | | | | |
| 2403-3741 | — | 1165 | — | 925 | — | | 455 | 528 | | 95 | | | 215 | 33 | 16 | 11 | | | | 0,231 | — | 5 | — |
| 2403-3742 | — | | | | | | | | | | | | | | | | | | | | | | |
| — | 2403-3744 | — | 1265 | — | 1025 | | 435 | 546 | | 80 | | | 195 | 39 | 14 | 10 | | | | — | 0,256 | 3 | 125 |
| — | 2403-3745 | | | | | | | | | | | | | | | | | | | | | | |
| 2403-3747 | — | 1140 | — | 900 | — | | 455 | 512 | | 95 | | | 215 | 32 | 16 | 11 | | | | 0,225 | — | 4 | — |
| 2403-3748 | — | | | | | | | | | | | | | | | | | | | | | | |
| — | 2403-3751 | — | 1265 | — | 1025 | | 435 | 532 | | 80 | 25 | 14 | 195 | 38 | 14 | 10 | | | | — | 0,256 | | 125 |
| — | 2403-3752 | | | | | | | | | | | | | | | | | | | | | | |
| 2403-3754 | — | 1140 | — | 900 | — | | 455 | 512 | | 95 | | | 215 | 32 | 16 | 11 | | | | 0,225 | — | | — |
| 2403-3755 | — | | | | | | | | | | | | | | | | | | | | | | |
| — | 2403-3757 | — | 1265 | — | 1025 | | 435 | 546 | | 80 | 24 | 13 | 195 | 39 | 14 | 10 | | | | — | 0,256 | 3 | 125 |
| — | 2403-3758 | | | | | | | | | | | | | | | | | | | | | | |
| 2403-3761 | — | 1140 | — | 900 | — | | 455 | 512 | | 90 | 25 | 14 | 215 | 32 | 16 | 11 | | | | 0,225 | — | 4 | — |
| 2403-3762 | — | | | | | | | | | | | | | | | | | | | | | | |

*Продолжение табл. 5*

Размеры, мм

| Обозначение протяжки исполнения | | Применяемость | | $D \times m$ | $z$ | Сочетание полей допусков $D$ и $e$ | $S$ | $D_1$ | $D_2$ | $D_3$ | $D_4$, не более | $D_5$ | $D_6$ | $D_7$ | $D_8$ | $D_9$ | $D_{10}$ | $D_{11}$ | $D_{12}$ |
|---|---|---|---|---|---|---|---|---|---|---|---|---|---|---|---|---|---|---|---|
| 1 | | 1 | 2 | | | | | | | | | | | | | | | | |
| — | 2403-3764 | | | 105×4 | 25 | H7—9H | 6,710 | 63 | 97 | 104,50 | 96,2 | 104,2 | 94 | 50 — | 105,2 | M48×3 | 43,5 | 50 | 70 |
| — | 2403-3765 | | | | | H8—11H | 6,790 | | | | | | | | | | | | |
| 2403-3767 | — | | | | | H7—9H | 6,710 | | | | | | | | | | | | |
| 2403-3768 | — | | | | | H8—11H | 6,790 | | | | | | | | | | | | |
| — | 2403-3771 | | | 110×4 | 26 | H7—9H | 7,297 | | 102 | 109,50 | 101,2 | 109,2 | 99 | 63 — | 110,0 | | | | |
| — | 2403-3772 | | | | | H8—11H | 7,387 | | | | | | | | | | | | |
| 2403-3774 | — | | | | | H7—9H | 7,297 | | | | | | | | | | | | |
| 2403-3775 | — | | | | | H8—11H | 7,387 | | | | | | | | | | | | |
| — | 2403-3777 | | | 120×4 | 28 | H7—9H | 8,452 | 70 | 112 | 119,50 | 111,2 | 119,2 | 109 | 63 — | 119,5 | | | | |
| — | 2403-3778 | | | | | H8—11H | 8,542 | | | | | | | | | | | | |
| 2403-3781 | — | | | | | H7—9H | 8,452 | | | | | | | | | | | | |
| 2403-3782 | — | | | | | H8—11H | 8,542 | | | | | | | | | | | | |
| — | 2403-3784 | | | 130×4 | 31 | H7—9H | 7,297 | | 122 | 129,50 — 129,63 | 121,2 | 129,2 | 119 | 63 — | 130,2 | | | | |
| — | 2403-3785 | | | | | H8—11H | 7,387 | | | | | | | | | | | | |
| 2403-3787 | — | | | | | H7—9H | 7,297 | | | | | | | | | | | | |
| 2403-3788 | — | | | | | H8—11H | 7,387 | | | | | | | | | | | | |
| 2403-3791 | — | | | 70×5 | 12 | H7—9H | 10,542 | 50 | 60 | 69,51 | 59,0 | 69,0 | 57 | | 69,0 | M36×3 | 31,5 | 38 | 50 |
| 2403-3792 | — | | | | | H8—11H | 10,632 | | | | | | | | | | | | |
| 2403-3794 | — | | | 75×5 | 13 | H7—9H | 10,542 | 63 | 65 | 74,48 | 64,0 | 74,0 | 62 | | 74,3 | M48×3 | 43,5 | 50 | 63 — 70 |
| 2403-3795 | — | | | | | H8—11H | 10,632 | | | | | | | | | | | | |
| 2403-3797 | — | | | 80×5 | 14 | H7—9H | 10,542 | | 70 | 79,48 | 69,0 | 79,0 | 67 | | 79,5 | | | | |
| 2403-3798 | — | | | | | H8—11H | 10,632 | | | | | | | | | | | | |
| 2403-3801 | — | | | 85×5 | 15 | H7—9H | 10,542 | | 75 | 84,61 | 74,0 | 84,0 | 72 | | 84,8 | | | | |
| 2403-3802 | — | | | | | H8—11H | 10,632 | | | | | | | | | | | | |
| 2403-3804 | — | | | 90×5 | 16 | H7—9H | 10,542 | | 80 | 89,63 | 79,0 | 89,0 | 77 | | 90,0 | | | | |
| 2403-3805 | — | | | | | H8—11H | 10,632 | | | | | | | | | | | | |
| 2403-3807 | — | | | 95×5 | 18 | H7—9H | 7,655 | | 85 | 94,61 | 84,0 | 94,0 | 82 | | 94,3 | | | | |
| 2403-3808 | — | | | | | H8—11H | 7,745 | | | | | | | | | | | | |
| 2403-3811 | — | | | 100×5 | | H7—9H | 10,542 | | 90 | 99,49 | 89,0 | 99,0 | 87 | | 100,4 | | | | |
| 2403-3812 | — | | | | | H8—11H | 10,632 | | | | | | | | | | | | |

*Продолжение табл. 5*

Размеры, мм

| Обозначение протяжки исполнения | | $L$ для исполнения | | $L_1$ для исполнения | | $l$ | $l_1$ | $l_2$ | $l_3$ | $l_4$ | $l_5$ | $l_6$ | $l_7$ | Черновые и переходные зубья | | | Чистовые и калибрующие зубья (число зубьев—10) | | $F$, не более | $c$ для исполнения | | $n$ | $l_8$ |
|---|---|---|---|---|---|---|---|---|---|---|---|---|---|---|---|---|---|---|---|---|---|---|---|
| 1 | 2 | 1 | 2 | 1 | 2 | | | | | | | | | Число | $t$ | Номер профиля | $t_1$ | Номер профиля | | 1 | 2 | | |
| — | 2403-3764 | — | 1265 | — | 1025 | 18 | 435 | 532 | 99 | 80 | 25 | 14 | 195 | 38 | 14 | 10 | 11 | 8 | 0,32 | — | 0,256 | 4 | 125 |
| — | 2403-3765 | | | | | | | | | | | | | | | | | | | | | | |
| 2403-3767 | — | 1140 | — | 900 | — | | 455 | 512 | | 90 | | | 215 | 32 | 16 | 11 | | | | 0,255 | — | | — |
| 2403-3768 | — | | | | | | | | | | | | | | | | | | | | | | |
| — | 2403-3771 | — | 1290 | — | 1050 | | 425 | 532 | | | 24 | 13 | 185 | 38 | 14 | 10 | | | | — | 0,262 | 3 | 175 |
| — | 2403-3772 | | | | | | | | | | | | | | | | | | | | | | |
| 2403-3774 | — | 1115 | — | 875 | — | | 440 | 512 | | | 22 | 11 | 200 | 32 | 16 | 11 | | | | 0,219 | — | 4 | — |
| 2403-3775 | — | | | | | | | | | | | | | | | | | | | | | | |
| — | 2403-3777 | — | 1315 | — | 1075 | | 435 | 546 | | | 24 | 13 | 195 | 39 | 14 | 10 | | | | — | 0,269 | 3 | 175 |
| — | 2403-3778 | | | | | | | | | | | | | | | | | | | | | | |
| 2403-3781 | — | 1140 | — | 900 | — | | 465 | 512 | | | 22 | 11 | 225 | 32 | 16 | 11 | | | | 0,225 | — | | — |
| 2403-3782 | — | | | | | | | | | | | | | | | | | | | | | | |
| — | 2403-3784 | — | 1315 | — | 1075 | | 435 | 532 | | | 25 | 14 | 195 | 38 | 14 | 10 | | | | — | 0,269 | 4 | 175 |
| — | 2403-3785 | | | | | | | | | | | | | | | | | | | | | | |
| 2403-3787 | — | 1140 | — | 900 | — | | 455 | 512 | | | | | 215 | 32 | 16 | 11 | | | | 0,225 | — | | — |
| 2403-3788 | — | | | | | | | | | | | | | | | | | | | | | | |
| 2403-3791 | — | 1150 | — | 950 | — | 20 | 410 | 560 | 108 | | | 13 | 210 | 40 | 14 | 10 | 12 | 9 | 0,40 | 0,238 | — | 3 | — |
| 2403-3792 | — | | | | | | | | | | | | | | | | | | | | | | |
| 2403-3794 | — | 1165 | | | | | 425 | 574 | | | 24 | 12 | | 41 | | | | | | | | | |
| 2403-3795 | — | | | | | | | | | | | | | | | | | | | | | | |
| 2403-3797 | — | | | | | | | 560 | | | | | | 40 | | | | | | | | 4 | |
| 2403-3798 | — | | | | | | | | | | 25 | 13 | | | | | | | | | | | |
| 2403-3801 | — | | | | | | 440 | 546 | | | | | 200 | 39 | | | | | | 0,231 | | | |
| 2403-3802 | — | | | | | | | | | | | | | | | | | | | | | | |
| 2403-3804 | — | | | | | | | 560 | | | 24 | 12 | | 40 | | | | | | | | 3 | |
| 2403-3805 | — | | | 925 | | | | | | | | | | | | | | | | | | | |
| 2403-3807 | — | | | | | | | | | | | | | | | | | | | | | | |
| 2403-3808 | — | | | | | | | | | | | | | | | | | | | | | | |
| 2403-3811 | — | 1140 | | 900 | | | 415 | | | | | | 175 | | | | | | | 0,225 | | | |
| 2403-3812 | — | | | | | | | | | | | | | | | | | | | | | | |

*Продолжение табл. 5*

Размеры, мм

| Обозначение протяжки исполнения | | Применяемость | | $D \times m$ | $z$ | Сочетание полей допусков $D$ и $e$ | $S$ | $D_1$ | $D_2$ | $D_3$ | $D_4$, не более | $D_5$ | $D_6$ | $D_7$ | $D_8$ | $D_9$ | $D_{10}$ | $D_{11}$ | $D_{12}$ |
|---|---|---|---|---|---|---|---|---|---|---|---|---|---|---|---|---|---|---|---|
| 1 | 2 | 1 | 2 | | | | | | | | | | | | | | | | |
| 2403-3814 | — | — | — | 105×5 | 20 | H7—9H | 7,655 | 63 | 95 | 104,49 | 94,0 | 104,0 | 92 | — | 104,5 | M48×3 | 43,5 | 50 | 70 |
| 2403-3815 | — | — | — | | | H8—11H | 7,745 | | | | | | | | | | | | |
| 2403-3817 | — | — | — | 110×5 | | H7—9H | 10,542 | | 100 | 109,49 | 99,0 | 109,0 | 97 | | 110,3 | | | | |
| 2403-3818 | — | — | — | | | H8—11H | 10,632 | | | | | | | | | | | | |
| 2403-3821 | — | — | — | 120×5 | 22 | H7—9H | 10,552 | 70 | 110 | 119,49 | 109,0 | 119,0 | 107 | | 120,3 | | | | |
| 2403-3822 | — | — | — | | | H8—11H | 10,652 | | | | | | | | | | | | |
| 2403-3824 | — | — | — | 130×5 | 24 | H7—9H | 10,552 | | 120 | 129,49 | 119,0 | 129,0 | 117 | | 130,3 | | | | |
| 2403-3825 | — | — | — | | | H8—11H | 10,652 | | | | | | | | | | | | |

*Продолжение табл. 5*

Размеры, мм

| Обозначение протяжки исполнения | | $L$ для исполнения | | $L_1$ для исполнения | | $l$ | $l_1$ | $l_2$ | $l_3$ | $l_4$ | $l_5$ | $l_6$ | $l_7$ | Черновые и переходные зубья | | | Чистовые и калибрующие зубья (число зубьев—10) | | $F$, не более | $c$ для исполнения | | $n$ | $l_8$ |
|---|---|---|---|---|---|---|---|---|---|---|---|---|---|---|---|---|---|---|---|---|---|---|---|
| 1 | 2 | 1 | 2 | 1 | 2 | | | | | | | | | Число | $t$ | Номер профиля | $t_1$ | Номер профиля | | 1 | 2 | | |
| 2403-3814 | — | 1165 | — | 925 | — | 20 | 415 | 574 | 108 | 80 | 24 | 12 | 175 | 41 | 14 | 10 | 12 | 9 | 0,40 | 0,231 | — | 4 | — |
| 2403-3815 | — | | | | | | | | | | | | | | | | | | | | | | |
| 2403-3817 | — | | | | | | | | | | | | | | | | | | | | | | |
| 2403-3818 | — | | | | | | | | | | | | | | | | | | | | | | |
| 2403-3821 | — | | | | | | | 560 | | | | | | 40 | | | | | | | | 3 | |
| 2403-3822 | — | | | | | | 440 | | | | | | 200 | | | | | | | | | | |
| 2403-3824 | — | 1190 | | 950 | | | | 574 | | | | | | 41 | | | | | | 0,238 | | 4 | |
| 2403-3825 | — | | | | | | | | | | | | | | | | | | | | | | |

Пример условного обозначения протяжки длиной $L=1190$ мм для шлицевого эвольвентного отверстия диаметром 130 мм, модулем 5 мм с центрированием по наружному диаметру, полем допуска центрирующего диаметра H7 и ширины впадины 9H, группы заточки II, исполнения *1*, *2*-го прохода:

*Протяжка 2403-3824 II ГОСТ Р 50038—92*

То же, протяжки с откорректированными исполнительными размерами:

*Протяжка 2403-3824 К II ГОСТ Р 50038—92*

Таблица 6

| *Обозначение протяжки исполнения* | | $D \times m$ | Сочетание полей допусков $D$ и $e$ | Поз. 1 | | Поз. 2 |
|---|---|---|---|---|---|---|
| | | | | *Протяжка исполнения* (кол. 1) | | Хвостовик (кол. 1) |
| 1 | 2 | | | 1 | 2 | |
| | | | | Обозначение | | |
| — | 2403-3571 | 70×3 | H7—9H | — | 2403-3571/1 | 2403-2245/2 |
| — | 2403-3572 | | H8—11H | — | 2403-3572/1 | |
| — | 2403-3574 | 75×3 | H7—9H | — | 2403-3574/1 | |
| — | 2403-3575 | | H8—11H | — | 2403-3575/1 | |
| 2403-3577 | 2403-3581 | 80×3 | H7—9H | 2403-3577/1 | 2403-3581/1 | |
| 2403-3578 | 2403-3582 | | H8—11H | 2403-3578/1 | 2403-3582/1 | |
| 2403-3584 | 2403-3587 | 85×3 | H7—9H | 2403-3584/1 | 2403-3587/1 | |
| 2403-3585 | 2403-3588 | | H8—11H | 2403-3585/1 | 2403-3588/1 | |
| 2403-3591 | 2403-3594 | 90×3 | H7—9H | 2403-3591/1 | 2403-3594/1 | |
| 2403-3592 | 2403-3595 | | H8—11H | 2403-3592/1 | 2403-3595/1 | |
| 2403-3597 | 2403-3601 | 95×3 | H7—9H | 2403-3597/1 | 2403-3601/1 | 2403-2263/2 |
| 2403-3598 | 2403-3602 | | H8—11H | 2403-3598/1 | 2403-3602/1 | |
| 2403-3604 | 2403-3607 | 100×3 | H7—9H | 2403-3604/1 | 2403-3607/1 | |
| 2403-3605 | 2403-3608 | | H8—11H | 2403-3605/1 | 2403-3608/1 | |
| 2403-3611 | 2403-3614 | 105×3 | H7—9H | 2403-3611/1 | 2403-3614/1 | |
| 2403-3612 | 2403-3615 | | H8—11H | 2403-3612/1 | 2403-3615/1 | |
| 2403-3617 | — | 110×3 | H7—9H | 2403-3617/1 | — | |
| 2403-3618 | — | | H8—11H | 2403-3618/1 | — | |
| 2403-3621 | — | 120×3 | H7—9H | 2403-3621/1 | — | |
| 2403-3622 | — | | H8—11H | 2403-3622/1 | — | 2403-2476/2 |
| 2403-3624 | — | 130×3 | H7—9H | 2403-3624/1 | — | |
| 2403-3625 | — | | H8—11H | 2403-3625/1 | — | |
| 2403-3627 | 2403-3631 | 55×3,5 | H7—9H | 2403-3627/1 | 2403-3631/1 | 2403-2205/2 |
| 2403-3628 | 2403-3632 | | H8—11H | 2403-3628/1 | 2403-3632/1 | |
| 2403-3634 | 2403-3637 | 60×3,5 | H7—9H | 2403-3634/1 | 2403-3637/1 | |
| 2403-3635 | 2403-3638 | | H8—11H | 2403-3638/1 | 2403-3638/1 | |
| 2403-3641 | 2403-3644 | 65×3,5 | H7—9H | 2403-3641/1 | 2403-3644/1 | |
| 2403-3642 | 2403-3645 | | H8—11H | 2403-3642/1 | 2403-3645/1 | 2403-2223/2 |
| 2403-3647 | 2403-3651 | 70×3,5 | H7—9H | 2403-3647/1 | 2403-3651/1 | |
| 2403-3648 | 2403-3652 | | H8—11H | 2403-3648/1 | 2403-3652/1 | |
| 2403-3654 | 2403-3657 | 75×3,5 | H7—9H | 2403-3654/1 | 2403-3657/1 | 2403-2245/2 |
| 2403-3655 | 2403-3658 | | H8—11H | 2403-3655/1 | 2403-3658/1 | |
| 2403-3661 | 2403-3664 | 80×3,5 | H7—9H | 2403-3661/1 | 2403-3664/1 | |
| 2403-3662 | 2403-3665 | | H8—11H | 2403-3662/1 | 2403-3665/1 | |
| 2403-3667 | 2403-3671 | 85×3,5 | H7—9H | 2403-3667/1 | 2403-3671/1 | |
| 2403-3668 | 2403-3672 | | H8—11H | 2403-3668/1 | 2403-3672/1 | |
| 2403-3674 | 2403-3677 | 90×3,5 | H7—9H | 2403-3674/1 | 2403-3677/1 | 2403-2263 2 |
| 2403-3675 | 2403-3678 | | H8—11H | 2403-3675/1 | 2403-3678/1 | |

*Продолжение табл. 6*

| Обозначение протяжки исполнения | | $D \times m$ | Сочетание полей допусков $D$ и $e$ | Поз. 1 | | Поз. 2 |
|---|---|---|---|---|---|---|
| | | | | Протяжка исполнения (кол. 1) | | Хвостовик (кол. 1) |
| 1 | 2 | | | 1 | 2 | |
| | | | | Обозначение | | |
| 2403-3681 | 2403-3684 | 95×3,5 | H7—9H | 2403-3681/1 | 2403-3684/1 | 2403-2263/2 |
| 2403-3682 | 2403-3685 | | H8—11H | 2403-3682/1 | 2403-3685/1 | |
| 2403-3687 | — | 100×3,5 | H7—9H | 2403-3687/1 | — | |
| 2403-3688 | — | | H8—11H | 2403-3688/1 | — | |
| 2403-3691 | — | 105×3,5 | H7—9H | 2403-3691/1 | — | |
| 2403-3692 | — | | H8—11H | 2403-3692/1 | — | |
| 2403-3694 | — | 110×3,5 | H7—9H | 2403-3694/1 | — | |
| 2403-3695 | — | | H8—11H | 2403-3695/1 | — | |
| 2403-3697 | — | 120×3,5 | H7—9H | 2403-3697/1 | — | 2403-2476/2 |
| 2403-3698 | — | | H8—11H | 2403-3698/1 | — | |
| 2403-3701 | — | 130×3,5 | H7—9H | 2403-3701/1 | — | |
| 2403-3702 | — | | H8—11H | 2403-3702/1 | — | |
| — | 2403-3704 | 60×4 | H7—9H | — | 2403-3704/1 | 2403-2218/2 |
| — | 2403-3705 | | H8—11H | — | 2403-3705/1 | |
| 2403-3707 | — | | H7—9H | 2403-3707/1 | — | 2403 2223/2 |
| 2403-3708 | — | | H8—11H | 2403-3708/1 | — | |
| — | 2403-3711 | 65×4 | H7—9H | — | 2403-3711/1 | 2403-2218/2 |
| — | 2403-3712 | | H8—11H | — | 2403-3712/1 | |
| 2403-3714 | — | | H7—9H | 2403-3714/1 | — | 2403-2223/2 |
| 2403-3715 | — | | H8—11H | 2403-3715/1 | — | |
| — | 2403-3717 | 70×4 | H7—9H | — | 2403-3717/1 | 2403-2218/2 |
| — | 2403-3718 | | H8—11H | — | 2403-3718/1 | |
| 2403-3721 | — | | H7—9H | 2403-3721/1 | — | 2403 2223/2 |
| 2403-3722 | — | | H8—11H | 2403-3722/1 | — | |
| — | 2403-3724 | 75×4 | H7—9H | — | 2403-3724/1 | 2403-2245/2 |
| — | 2403-3725 | | H8—11H | — | 2403-3725/1 | |
| 2403-3727 | — | | H7—9H | 2403-3727/1 | — | |
| 2403-3728 | — | | H8—11H | 2403-3728/1 | — | |
| — | 2403-3731 | 80×4 | H7—9H | — | 2403-3731/1 | |
| — | 2403-3732 | | H8—11H | — | 2403-3732/1 | |
| 2403-3734 | — | | H7—9H | 2403-3734/1 | — | |
| 2403-3735 | — | | H8—11H | 2403-3735/1 | — | |
| — | 2403-3737 | 85×4 | H7—9H | — | 2403-3737/1 | 2403-2263/2 |
| — | 2403-3738 | | H8—11H | — | 2403-3738/1 | |
| 2403 3741 | — | | H7—9H | 2403-3741/1 | — | |
| 2403-3742 | — | | H8—11H | 2403-3742/1 | — | |
| — | 2403-3744 | 90×4 | H7—9H | — | 2403-3744/1 | |
| — | 2403-3745 | | H8—11H | — | 2403-3745/1 | |
| 2403-3747 | — | | H7—9H | 2403-3747/1 | — | |
| 2403-3748 | — | | H8—11H | 2403-3748/1 | — | |

*Продолжение табл. 6*

| Обозначение протяжки исполнения | | $D \times m$ | Сочетание полей допусков $D$ и $e$ | Поз. 1 | | Поз. 2 |
|---|---|---|---|---|---|---|
| | | | | Протяжка исполнения (кол. 1) | | Хвостовик (кол. 1) |
| 1 | 2 | | | 1 | 2 | |
| | | | | Обозначение | | |
| — | 2403-3751 | 95×4 | H7—9H | — | 2403-3751/1 | 2403-2263/2 |
| — | 2403-3752 | | H8—11H | — | 2403-3752/1 | |
| 2403-3754 | | | H7—9H | 2403-3754/1 | — | |
| 2403-3755 | | | H8—11H | 2403-3755/1 | — | |
| — | 2403-3757 | 100×4 | H7—9H | — | 2403-3757/1 | |
| — | 2403-3758 | | H8—11H | — | 2403-3758/1 | |
| 2403-3761 | — | | H7—9H | 2403-3761/1 | — | |
| 2403-3762 | — | | H8—11H | 2403-3762/1 | — | |
| — | 2403-3764 | 105×4 | H7—9H | — | 2403-3764/1 | |
| — | 2403-3765 | | H8—11H | — | 2403-3765/1 | |
| 2403-3767 | — | | H7—9H | 2403-3767/1 | — | |
| 2403-3768 | — | | H8—11H | 2403-3768/1 | — | |
| — | 2403-3771 | 110×4 | H7—9H | — | 2403-3771/1 | |
| — | 2403-3772 | | H8—11H | — | 2403-3772/1 | |
| 2403-3774 | — | | H7—9H | 2403-3774/1 | — | |
| 2403-3775 | — | | H8—11H | 2403-3775/1 | — | |
| — | 2403-3777 | 120×4 | H7—9H | — | 2403-3777/1 | — |
| — | 2403-3778 | | H8—11H | — | 2403-3778/1 | |
| 2403-3781 | — | | H7—9H | 2403-3781/1 | — | |
| 2403-3782 | — | | H8—11H | 2403-3782/1 | — | |
| — | 2403-3784 | 130×4 | H7—9H | — | 2403-3784/1 | 2403-2476/2 |
| — | 2403-3785 | | H8—11H | — | 2403-3785/1 | |
| 2403-3787 | — | | H7—9H | 2403-3787/1 | — | |
| 2403-3788 | — | | H8—11H | 2403-3788/1 | — | |
| 2403-3791 | — | 70×5 | H7—9H | 2403-3791/1 | — | 2403-2223/2 |
| 2403-3792 | — | | H8—11H | 2403-3792/1 | — | |
| 2403-3794 | — | 75×5 | H7—9H | 2403-3794/1 | — | 2403-2245/2 |
| 2403-3795 | — | | H8—11H | 2403-3795/1 | — | |
| 2403-3797 | — | 80×5 | H7—9H | 2403-3797/1 | — | |
| 2403-3798 | — | | H8—11H | 2403-3798/1 | — | |
| 2403-3801 | — | 85×5 | H7—9H | 2403-3801/1 | — | 2403-2263/2 |
| 2403-3802 | — | | H8—11H | 2403-3802/1 | — | |
| 2403-3804 | — | 90×5 | H7—9H | 2403-3804/1 | — | |
| 2403-3805 | — | | H8—11H | 2403-3805/1 | — | |
| 2403-3807 | — | 95×5 | H7—9H | 2403-3807/1 | — | |
| 2403-3808 | — | | H8—11H | 2403-3808/1 | — | |
| 2403-3811 | — | 100×5 | H7—9H | 2403-3811/1 | — | |
| 2403-3812 | — | | H8—11H | 2403-3812/1 | — | |
| 2403-3814 | — | 105×5 | H7—9H | 2403-3814/1 | — | |
| 2403-3815 | — | | H8—11H | 2403-3815/1 | — | |
| 2403-3817 | — | 110×5 | H7—9H | 2403-3817/1 | — | — |
| 2403-3818 | — | | H8—11H | 2403-3818/1 | — | |
| 2403-3821 | — | 120×5 | H7—9H | 2403-3821/1 | — | 2403-2476/2 |
| 2403-3822 | — | | H8—11H | 2403-3822/1 | — | |
| 2403-3824 | — | 130×5 | H7—9H | 2403-3824/1 | — | |
| 2403-3825 | — | | H8—11H | 2403-3825/1 | — | |

Таблица 7

Размеры, мм

| Обозначение протяжки | $D \times m$ | Сочетание полей допусков $D$ и $e$ | $x_1$ | $x_2$ | $x_3$ | $y_1$ | $y_2$ | $y_3$ | $x_0$ | $y_0$ | $R$ | $d_p$ | $W$ | $M$ на буртике | $M$ на зубе номер $W$ | $M$ на последнем калибрующем зубе | $d_{p1}$ | $M_1$ (на передней направляющей) |
|---|---|---|---|---|---|---|---|---|---|---|---|---|---|---|---|---|---|---|
| 2403-3571 | 70×3 | H7—9H | 1,768 | 2,540 | 3,354 | 32,392 | 33,592 | 34,670 | 17,680 | 23,005 | 18,475 | 5,454 | 15 | 74,878 | 74,756 | 74,586 | 8,282 | 81,55 |
| | | | | | | | | | | | | 7,000 | — | 79,121 | — | 78,829 | | |
| | | | | | | | | | | | | 8,282 | — | 82,508 | — | 82,216 | | |
| 2403-3572 | | H8—11H | 1,727 | 2,499 | 3,313 | | | | 17,639 | | | 5,454 | 15 | 75,001 | 74,878 | 74,709 | | |
| | | | | | | | | | | | | 7,000 | — | 79,231 | — | 78,939 | | |
| | | | | | | | | | | | | 8,282 | — | 82,610 | — | 82,318 | | |
| 2403-3574 | 75×3 | H7—9H | 1,754 | 2,479 | 3,243 | 34,876 | 36,083 | 37,170 | 18,432 | 25,684 | 19,043 | 5,454 | 15 | 80,001 | 79,879 | 79,709 | | 86,36 |
| | | | | | | | | | | | | 6,212 | — | 82,154 | — | 81,862 | | |
| | | | | | | | | | | | | 7,000 | — | 84,336 | — | 84,044 | | |
| 2403-3575 | | H8—11H | 1,714 | 2,439 | 3,203 | | | | 18,392 | | | 5,454 | 15 | 80,128 | 80,005 | 79,836 | | |
| | | | | | | | | | | | | 6,212 | — | 82,274 | — | 81,982 | | |
| | | | | | | | | | | | | 7,000 | — | 84,449 | — | 84,157 | | |
| 2403-3577<br>2403-3581 | 80×3 | H7—9H | 1,781 | 2,579 | 3,403 | 37,388 | 38,592 | 39,676 | 20,319 | 25,968 | 21,773 | 6,212 | 16 | 86,711 | 86,581 | 86,420 | 8,282 | 90,92 |
| | | | | | | | | | | | | 7,000 | — | 88,841 | — | 88,550 | | |
| | | | | | | | | | | | | 8,282 | — | 92,228 | — | 91,937 | | |
| 2403-3578<br>2403-3582 | | H8—11H | 1,740 | 2,538 | 3,362 | | | | 20,278 | | | 6,212 | 16 | 86,827 | 86,697 | 86,535 | | |
| | | | | | | | | | | | | 7,000 | — | 88,952 | — | 88,661 | | |
| | | | | | | | | | | | | 8,282 | — | 92,332 | — | 92,040 | | |
| 2403-3584<br>2403-3587 | 85×3 | H7—9H | 1,778 | 2,536 | 3,319 | 39,910 | 41,120 | 42,211 | 21,173 | 28,589 | 22,458 | 5,454 | 15 | 89,774 | 89,652 | 89,483 | | 96,14 |
| | | | | | | | | | | | | 7,000 | — | 94,075 | — | 93,783 | | |
| | | | | | | | | | | | | 8,282 | — | 97,518 | — | 97,227 | | |
| 2403-3585<br>2403-3588 | | H8—11H | 1,737 | 2,496 | 3,278 | | | | 21,133 | | | 5,454 | 15 | 89,899 | 89,777 | 89,608 | | |
| | | | | | | | | | | | | 7,000 | — | 94,189 | — | 93,897 | | |
| | | | | | | | | | | | | 8,282 | — | 97,625 | — | 97,333 | | |
| 2403-3591<br>2403-3594 | 90×3 | H7—9H | 1,807 | 2,626 | 3,457 | 42,392 | 43,599 | 44,688 | 22,980 | 28,914 | 25,099 | 6,212 | 16 | 96,757 | 96,627 | 96,466 | | 101,00 |
| | | | | | | | | | | | | 7,000 | — | 98,886 | — | 98,594 | | |
| | | | | | | | | | | | | 8,282 | — | 102,281 | — | 101,989 | | |
| 2403-3592<br>2403-3595 | | H8—11H | 1,765 | 2,584 | 3,416 | | | | 22,939 | | | 6,212 | 16 | 96,874 | 96,743 | 96,582 | | |
| | | | | | | | | | | | | 7,000 | — | 98,998 | — | 98,706 | | |
| | | | | | | | | | | | | 8,282 | — | 102,386 | — | 102,094 | | |

*Продолжение табл. 7*

Размеры, мм

| Обозначение протяжки | $D \times m$ | Сочетание полей допусков $D$ и $e$ | $x_1$ | $x_2$ | $x_3$ | $y_1$ | $y_2$ | $y_3$ | $x_0$ | $y_0$ | $R$ | $d_p$ | $W$ | $M$ на буртике | $M$ на зубе номер $W$ | $M$ на последнем калибрующем зубе | $d_{p1}$ | $M_1$ (на передней направляющей) |
|---|---|---|---|---|---|---|---|---|---|---|---|---|---|---|---|---|---|---|
| 2403-3597<br>2403-3601 | 95×3 | H7—9H | 1,794 | 2,577 | 3,371 | 44,914 | 46,126 | 47,222 | 23,864 | 31,524 | 25,814 | 5,454 | 14 | 99,825 | 99,711 | 99,533 | 8,282 | 106,22 |
| | | | | | | | | | | | | 7,000 | — | 104,108 | — | 103,816 | | |
| | | | | | | | | | | | | 8,282 | — | 107,553 | — | 107,261 | | |
| 2403-3589<br>2403-3602 | | H8—11H | 1,753 | 2,536 | 3,330 | | | | 23,823 | | | 5,454 | 14 | 99,948 | 99,834 | 99,656 | | |
| | | | | | | | | | | | | 7,000 | — | 104,221 | — | 103 929 | | |
| | | | | | | | | | | | | 8,282 | — | 107,659 | — | 107,367 | | |
| 2403-3604<br>2403-3607 | 100×3 | H7—9H | 1,772 | 2,519 | 3,351 | 47,402 | 48,618 | 49,818 | 24,682 | 34,157 | 26,462 | 5,454 | 14 | 104,944 | 104,830 | 104,652 | | 111,40 |
| | | | | | | | | | | | | 6,212 | — | 107,100 | — | 106,808 | | |
| | | | | | | | | | | | | 7,000 | — | 109,298 | — | 109,006 | | |
| 2403-3605<br>2403-3608 | | H8—11H | 1,732 | 2,479 | 3,310 | | | | 24,641 | | | 5,454 | 14 | 105,072 | 104,958 | 104,780 | | |
| | | | | | | | | | | | | 6,212 | — | 107,223 | — | 106,931 | | |
| | | | | | | | | | | | | 7,000 | — | 109,416 | — | 109,124 | | |
| 2403-3611<br>2403-3614 | 105×3 | H7—9H | 1,774 | 2,491 | 3,220 | 49,918 | 51,137 | 52,243 | 25,390 | 36,834 | 26,999 | 5,454 | 14 | 110,051 | 109,937 | 109,759 | | 116,58 |
| | | | | | | | | | | | | 6,212 | — | 112,243 | — | 111,951 | | |
| | | | | | | | | | | | | 7,000 | — | 114,475 | — | 114,183 | | |
| 2403-3612<br>2403-3615 | | H8—11H | 1,728 | 2,446 | 3,175 | | | | 25,345 | | | 5,454 | 14 | 110,199 | 110,084 | 109,907 | | |
| | | | | | | | | | | | | 6,212 | — | 112,384 | — | 112,092 | | |
| | | | | | | | | | | | | 7,000 | — | 114,610 | — | 114,318 | | |
| 2403-3617 | 110×3 | H7—9H | 1,790 | 2,559 | 3,331 | 52,419 | 53,637 | 54,741 | 27,315 | 37,135 | 29 752 | 5,454 | 14 | 114,769 | 114,654 | 114,477 | | 121,22 |
| | | | | | | | | | | | | 6,212 | — | 116,907 | — | 116,616 | | |
| | | | | | | | | | | | | 7,000 | — | 119,093 | — | 118,802 | | |
| 2403-3618 | | H8—11H | 1,744 | 2,513 | 3,286 | | | | 27,269 | | | 5,454 | 14 | 114,911 | 114,797 | 114,619 | | |
| | | | | | | | | | | | | 6,212 | — | 117,044 | — | 116,753 | | |
| | | | | | | | | | | | | 7,000 | — | 119,225 | — | 118,934 | | |
| 2403-3621 | 120×3 | H7—9H | 1,809 | 2,596 | 3,378 | 57,422 | 58,641 | 59,746 | 30,027 | 40,059 | 33,132 | 5,454 | 13 | 124,787 | 124,681 | 124,495 | | 131,25 |
| | | | | | | | | | | | | 7,000 | — | 129,094 | — | 128,802 | | |
| | | | | | | | | | | | | 8,282 | — | 132,576 | — | 132,284 | | |
| 2403-3622 | | H8—11H | 1,762 | 2,550 | 3,332 | | | | 29,981 | | | 5,454 | 13 | 124,928 | 124,822 | 124,636 | | |
| | | | | | | | | | | | | 7,000 | | 129,226 | — | 128,934 | | |
| | | | | | | | | | | | | 8,282 | — | 132,702 | — | 132,410 | | |

*Продолжение табл. 7*

Размеры, мм

| Обозначение протяжки | $D \times m$ | Сочетание полей допусков $D$ и $e$ | $x_1$ | $x_2$ | $x_3$ | $y_1$ | $y_2$ | $y_3$ | $x_0$ | $y_0$ | $R$ | $d_p$ | $W$ | $M$ на буртике | $M$ на зубе номер $W$ | $M$ на последнем калибрующем зубе | $d_{p1}$ | $M_1$ (на передней направляющей) |
|---|---|---|---|---|---|---|---|---|---|---|---|---|---|---|---|---|---|---|
| 2403-3624 | 130×3 | H7—9H | 1,780 | 2,515 | 3,246 | 62,425 | 63,648 | 64,761 | 31,634 | 45,318 | 34,408 | 5,454 | 14 | 135,000 | 134,886 | 134,708 | 8,282 | 141,58 |
| | | | | | | | | | | | | 6,212 | — | 137,187 | — | 136,895 | | |
| | | | | | | | | | | | | 7,000 | — | 139,422 | — | 139,130 | | |
| 2403-3625 | | H8—11H | 1,734 | 2,469 | 3,200 | | | | 31,589 | | | 5,454 | 14 | 135,148 | 135,033 | 134 856 | | |
| | | | | | | | | | | | | 6,212 | — | 137,329 | — | 137,037 | | |
| | | | | | | | | | | | | 7,000 | — | 139 560 | — | 139,268 | | |
| 2403-3627<br>2403-3631 | 55×3,5 | H7—9H | 2,074 | 3,129 | 4,402 | 24,387 | 25,767 | 27,082 | 14,762 | 15,778 | 15 333 | 7,000 | 15 | 61,957 | 61,835 | 61,657 | 10,353 | 69,18 |
| | | | | | | | | | | | | 8,690 | — | 66,281 | — | 65,981 | | |
| | | | | | | | | | | | | 10,353 | — | 70,397 | — | 70,097 | | |
| 2403-3628<br>2403-3632 | | H8—11H | 2,038 | 3,093 | 4,366 | | | | 14,726 | | | 7,000 | 15 | 62,048 | 61,926 | 61,748 | | |
| | | | | | | | | | | | | 8,690 | — | 66,363 | — | 66,063 | | |
| | | | | | | | | | | | | 10,353 | — | 70,472 | — | 70,172 | | |
| 2403-3634<br>2403-3637 | 60×3,5 | H7—9H | 2,016 | 2,924 | 4,034 | 26,874 | 28,281 | 29,640 | 15,287 | 19,308 | 15,277 | 7,000 | 17 | 67,432 | 67,293 | 67,124 | | 74,76 |
| | | | | | | | | | | | | 8,690 | — | 71,918 | — | 71,610 | | |
| | | | | | | | | | | | | 10,353 | — | 76,156 | — | 75,848 | | |
| 2403-3635<br>2403-3638 | | H8—11H | 1,976 | 2,883 | 3,994 | | | | 15,247 | | | 7,000 | 17 | 67,545 | 67,406 | 67,237 | | |
| | | | | | | | | | | | | 8 690 | — | 72,019 | — | 71,711 | | |
| | | | | | | | | | | | | 10,353 | — | 76,246 | — | 75,938 | | |
| 2403-3641<br>2403-3644 | 65×3.5 | H7—9H | 2,068 | 2,860 | 3,762 | 29,417 | 30,839 | 32,120 | 15,596 | 22,818 | 15,051 | 6,518 | 17 | 71,352 | 71,213 | 71,044 | 8,690 | 76,04 |
| | | | | | | | | | | | | 8,282 | — | 76,299 | — | 75,991 | | |
| | | | | | | | | | | | | 8,690 | — | 77,400 | — | 77,092 | | |
| 2403-3642<br>2403-3645 | | H8—11H | 2,029 | 2,821 | 3,723 | | | | 15,556 | | | 6,518 | 17 | 71,478 | 71,340 | 71,170 | | |
| | | | | | | | | | | | | 8,282 | — | 76,408 | — | 76,100 | | |
| | | | | | | | | | | | | 8,690 | — | 77,506 | — | 77,198 | | |
| 2403-3647<br>2403-3651 | 70×3,5 | H7—9H | 2,120 | 3,177 | 4,303 | 31,920 | 33,321 | 34,572 | 18,529 | 20,639 | 19,913 | 7,000 | 17 | 76,912 | 76,773 | 76,604 | 10,353 | 84,25 |
| | | | | | | | | | | | | 8,690 | — | 81,290 | — | 80,982 | | |
| | | | | | | | | | | | | 10,950 | — | 86,949 | — | 86,641 | | |
| 2403-3648<br>2403-3652 | | H8—11H | 2,078 | 3,135 | 4,261 | | | | 18,487 | | | 7,000 | 17 | 77,021 | 76,882 | 76,713 | | |
| | | | | | | | | | | | | 8,690 | — | 81,390 | — | 81,082 | | |
| | | | | | | | | | | | | 10,950 | — | 87,039 | — | 86,731 | | |

*Продолжение табл. 7*

Размеры, мм

| Обозначение протяжки | $D \times m$ | Сочетание полей допусков $D$ и $e$ | $x_1$ | $x_2$ | $x_3$ | $y_1$ | $y_2$ | $y_3$ | $x_0$ | $y_0$ | $R$ | $d_p$ | $W$ | $M$ на буртике | $M$ на зубе номер $W$ | $M$ на последнем калибрующем зубе | $d_{p1}$ | $M_1$ (на передней направляющей) |
|---|---|---|---|---|---|---|---|---|---|---|---|---|---|---|---|---|---|---|
| 2403-3654<br>2403-3657 | 75×3,5 | H7—9H | 2,039 | 2,980 | 4,080 | 34,400 | 35,818 | 37,200 | 19,127 | 24,090 | 19,957 | 6,518 | 15 | 81,025 | 80,902 | 80,725 | 8,690 | 85,52 |
| | | | | | | | | | | | | 8,282 | — | 85,789 | — | 85,489 | | |
| | | | | | | | | | | | | 10,353 | — | 91,153 | — | 90,853 | | |
| 2403-3655<br>2403-3658 | | H8—11H | 1,998 | 2,939 | 4,040 | | | | 19,087 | | | 6,518 | 15 | 81,143 | 81,021 | 80,843 | | |
| | | | | | | | | | | | | 8,282 | — | 85,895 | — | 85,595 | | |
| | | | | | | | | | | | | 10,353 | — | 91,249 | — | 90,949 | | |
| 2403-3661<br>2403-3664 | 80×3,5 | H7—9H | 2,053 | 2,899 | 3,816 | 36,933 | 38,362 | 39,656 | 19,519 | 27,560 | 19,821 | 6,518 | 15 | 86,282 | 86,160 | 85,974 | | 90,84 |
| | | | | | | | | | | | | 8,282 | — | 91,212 | — | 90,904 | | |
| | | | | | | | | | | | | 8,690 | — | 92,317 | — | 92,009 | | |
| 2403-3662<br>2403-3665 | | H8—11H | 2,014 | 2,860 | 3,776 | | | | 19,479 | | | 6,518 | 15 | 86,408 | 86,285 | 86,100 | | |
| | | | | | | | | | | | | 8,282 | — | 91,323 | — | 91,015 | | |
| | | | | | | | | | | | | 8,690 | — | 92,426 | — | 92,118 | | |
| 2403-3667<br>2403-3671 | 85×3,5 | H7—9H | 2,088 | 2,844 | 3,749 | 39,415 | 40,853 | 42,268 | 19,733 | 31,049 | 19,528 | 6,518 | 17 | 91,417 | 91,279 | 91,117 | 8,282 | 94,90 |
| | | | | | | | | | | | | 8,282 | | 96,531 | — | 96,231 | | |
| | | | | | | | | | | | | 8,690 | — | 97,671 | — | 97,371 | | |
| 2403-3668<br>2403-3672 | | H8—11H | 2,049 | 2,805 | 3,710 | | | | 19,694 | | | 6 518 | 17 | 91,551 | 91,413 | 91,251 | | |
| | | | | | | | | | | | | 8,282 | — | 96,648 | — | 96,348 | | |
| | | | | | | | | | | | | 8,690 | — | 97,784 | — | 97,484 | | |
| 2403-3674<br>2403-3677 | 90×3,5 | H7—9H | 2,069 | 3,030 | 4,123 | 41,919 | 43,346 | 44,744 | 22,950 | 28,891 | 24,612 | 6,518 | 15 | 95,939 | 95,816 | 95,639 | 8,690 | 100,48 |
| | | | | | | | | | | | | 8,282 | — | 100,717 | — | 100,417 | | |
| | | | | | | | | | | | | 10,353 | — | 106,127 | — | 105,827 | | |
| 2403-3675<br>2403-3678 | | H8—11H | 2,027 | 2,989 | 4,082 | | | | 22,909 | | | 6,518 | 15 | 96,058 | 95,936 | 95 758 | | |
| | | | | | | | | | | | | 8,282 | — | 100,826 | — | 100,526 | | |
| | | | | | | | | | | | | 10,353 | — | 106 227 | — | 105,927 | | |
| 2403-3681<br>2403-3684 | 95×3,5 | H7—9H | 2,061 | 2,943 | 3,870 | 44,452 | 45,888 | 47,191 | 23,382 | 32,344 | 24,519 | 6,518 | 15 | 101,210 | 101,088 | 100,902 | | 105,80 |
| | | | | | | | | | | | | 8,282 | — | 106,128 | — | 105,820 | | |
| | | | | | | | | | | | | 8,690 | — | 107,236 | — | 106,928 | | |
| 2403-3682<br>2403-3685 | | H8—11H | 2,021 | 2,903 | 3,829 | | | | 23,341 | | | 6,518 | 15 | 101,336 | 101,213 | 101,028 | | |
| | | | | | | | | | | | | 8,282 | — | 106,241 | — | 105,933 | | |
| | | | | | | | | | | | | 8,690 | — | 107,347 | — | 107,039 | | |

Размеры, мм

| Обозначение протяжки | $D \times m$ | Сочетание полей допусков $D$ и $e$ | $x_1$ | $x_2$ | $x_3$ | $y_1$ | $y_2$ | $y_3$ | $x_0$ | $y_0$ | $R$ | $d_p$ | $W$ | $M$ на буртике | $M$ на зубе номер $W$ | $M$ на последнем калибрующем зубе | $d_{p1}$ | $M_1$ (на передней направляющей |
|---|---|---|---|---|---|---|---|---|---|---|---|---|---|---|---|---|---|---|
| 2403-3687 | 100×3,5 | H7—9H | 2,066 | 2,872 | 3,800 | 46,935 | 48,377 | 49,799 | 23,703 | 35,790 | 24,339 | 6,518 | 15 | 106,380 | 106,258 | 106,080 | 8,282 | 109,89 |
| | | | | | | | | | | | | 8,282 | — | 111,450 | — | 111,150 | | |
| | | | | | | | | | | | | 8,690 | — | 112,588 | — | 112,288 | | |
| 2403-3688 | | H8—11H | 2,026 | 2,832 | 3,761 | | | | 23,664 | | | 6,518 | 15 | 106,512 | 106,389 | 106 212 | | |
| | | | | | | | | | | | | 8,282 | — | 111,568 | — | 111,268 | | |
| | | | | | | | | | | | | 8,690 | — | 112,704 | — | 112,404 | | |
| 2403-3691 | 105×3,5 | H7—9H | 2,053 | 2,912 | 3,806 | 49,447 | 50,889 | 52,201 | 25,459 | 36,481 | 26,757 | 6,518 | 14 | 111,138 | 111,023 | 110,830 | 8,282 | 115,77 |
| | | | | | | | | | | | | 8,282 | — | 116 113 | — | 115,806 | | |
| | | | | | | | | | | | | 8,690 | — | 117,235 | — | 116,928 | | |
| 2403-3692 | | H8—11H | 2,008 | 2,867 | 3,761 | | | | 25,414 | | | 6,518 | 14 | 111,281 | 111,167 | 110,974 | | |
| | | | | | | | | | | | | 8,282 | — | 116,244 | — | 115,936 | | |
| | | | | | | | | | | | | 8,690 | — | 117,363 | — | 117,056 | | |
| 2403-3694 | 110×3,5 | H7—9H | 2,067 | 2,973 | 3,905 | 51,959 | 53,399 | 54,711 | 27,211 | 37,151 | 29,181 | 6,518 | 14 | 116,152 | 116,037 | 115,844 | 8,690 | 120,77 |
| | | | | | | | | | | | | 8,282 | — | 121,060 | — | 120,752 | | |
| | | | | | | | | | | | | 8,690 | — | 122,171 | — | 121,863 | | |
| 2403-3695 | | H8—11H | 2,021 | 2,927 | 3,860 | | | | 27,165 | | | 6,518 | 14 | 116,292 | 116,178 | 115,984 | | |
| | | | | | | | | | | | | 8,282 | — | 121,189 | — | 120,881 | | |
| | | | | | | | | | | | | 8,690 | — | 122,297 | — | 121,989 | | |
| 2403-3697 | 120×3,5 | H7—9H | 2,091 | 2,873 | 3,685 | 56,962 | 58,411 | 59,736 | 27,808 | 44,030 | 28,786 | 6 518 | 16 | 126,437 | 126,307 | 126,129 | 8,282 | 130,03 |
| | | | | | | | | | | | | 8,282 | — | 131,617 | — | 131,308 | | |
| | | | | | | | | | | | | 8,690 | — | 132,781 | — | 132,473 | | |
| 2403-3698 | | H8—11H | 2,047 | 2,828 | 3,641 | | | | 27,764 | | | 6,518 | 16 | 126,591 | 126,461 | 126,283 | | |
| | | | | | | | | | | | | 8,282 | — | 131,756 | — | 131,448 | | |
| | | | | | | | | | | | | 8,690 | — | 132,917 | — | 132,609 | | |
| 2403-3701 | 130×3,5 | H7—9H | 2,058 | 2,924 | 3,805 | 61,956 | 63,405 | 64,728 | 31,412 | 45,397 | 33 702 | 6,518 | 15 | 136,279 | 136,156 | 135,971 | 8,690 | 140,98 |
| | | | | | | | | | | | | 8,282 | — | 141,294 | — | 140,986 | | |
| | | | | | | | | | | | | 8,690 | — | 142 430 | — | 142,122 | | |
| 2403-3702 | | H8—11H | 2,013 | 2,879 | 3,760 | | | | 31,367 | | | 6,518 | 15 | 136,424 | 136,302 | 136,116 | | |
| | | | | | | | | | | | | 8,282 | — | 141,429 | — | 141,121 | | |
| | | | | | | | | | | | | 8,690 | — | 142,562 | — | 142,254 | | |

*Продолжение табл. 7*

Размеры, мм

| Обозначение протяжки | $D \times m$ | Сочетание полей допусков $D$ и $e$ | $x_1$ | $x_2$ | $x_3$ | $y_1$ | $y_2$ | $y_3$ | $x_0$ | $y_0$ | $R$ | $d_p$ | $W$ | $M$ на буртике | $M$ на зубе номер $W$ | $M$ на последнем калибрующем зубе | $d_{p1}$ | $M_1$ (на передней направляющей) |
|---|---|---|---|---|---|---|---|---|---|---|---|---|---|---|---|---|---|---|
| 2403-3704 | 60×4 | H7—9H | 2,408 | 3,675 | 5,191 | 26,400 | 27,925 | 29,365 | 16,325 | 16,123 | 17,301 | 8,282 | 19 | 67,903 | 67,767 | 67,572 | 13,133 | 78,43 |
| | | | | | | | | | | | | 10,353 | — | 73,051 | — | 72,719 | | |
| | | | | | | | | | | | | 13,133 | — | 79,723 | — | 79,391 | | |
| 2403-3705 | | H8—11H | 2,365 | 3,632 | 5,149 | | | | 16,282 | | | 8,282 | 19 | 68,003 | 67,867 | 67,671 | | |
| | | | | | | | | | | | | 10,353 | — | 73,140 | — | 72,809 | | |
| | | | | | | | | | | | | 13,133 | — | 79,802 | — | 79,471 | | |
| *2403-3707* | | *H7—9H* | *2,405* | *3,741* | *5,227* | 26,396 | 27,992 | 29,390 | *16,340* | 16,087 | 17,334 | 8,282 | 16 | 67,899 | 67,769 | 67,577 | | |
| | | | | | | | | | | | | 10,353 | — | 73,044 | — | 72,722 | | |
| | | | | | | | | | | | | 13,133 | — | 79,714 | — | 79,392 | | |
| 2403-3708 | | H8—11H | 2,362 | 3,698 | 5,184 | | | | 16,297 | | | 8,282 | 16 | 67,999 | 67,869 | 67,676 | | |
| | | | | | | | | | | | | 10,353 | — | 73,134 | — | 72,811 | | |
| | | | | | | | | | | | | 13,133 | — | 79,794 | — | 79,471 | | |
| 2403-3711 | 65×4 | H7—9H | 2,335 | 3,387 | 4,674 | 28,966 | 30,528 | 32,032 | 16,793 | 20,358 | 16,827 | 8,282 | 20 | 73,762 | 73,618 | 73,436 | 10,950 | 79,12 |
| | | | | | | | | | | | | 10,353 | — | 79 138 | — | 78,813 | | |
| | | | | | | | | | | | | 12,423 | — | 84,300 | — | 83,975 | | |
| 2403-3712 | | H7—9H | 2,294 | 3,347 | 4,633 | | | | 16,752 | | | 8,282 | 20 | 73,869 | 73,726 | 73,544 | | |
| | | | | | | | | | | | | 10,353 | — | 79,233 | — | 78,908 | | |
| | | | | | | | | | | | | 12,423 | — | 84,386 | — | 84,061 | | |
| 2403-3714 | | H7—9H | 2,335 | 3,358 | 4,604 | | 30,487 | 31,953 | 16,701 | 20,405 | 16,724 | 8,282 | 17 | 73,757 | 73,619 | 73,434 | | |
| | | | | | | | | | | | | 10,353 | — | 79,131 | — | 78,807 | | |
| | | | | | | | | | | | | 12,423 | — | 84,289 | — | 83,966 | | |
| 2403-3715 | | H8—11H | 2,294 | 3,318 | 4,564 | | | | 16,660 | | | 8,282 | 17 | 73,865 | 73,726 | 73,542 | | |
| | | | | | | | | | | | | 10,353 | — | 79,225 | — | 78,902 | | |
| | | | | | | | | | | | | 12,423 | — | 84,374 | — | 84,051 | | |
| 2403-3717 | 70×4 | H7—9H | 2,313 | 3,481 | 4,802 | 31,405 | 33,066 | 34,572 | 18,264 | 21,432 | 18,812 | 8,282 | 20 | 78,962 | 78,817 | 78,635 | | 84,36 |
| | | | | | | | | | | | | 10,353 | — | 84,333 | — | 84,006 | | |
| | | | | | | | | | | | | 12,423 | — | 89,510 | — | 89,183 | | |
| 2403-3718 | | H8—11H | 2,272 | 3,440 | 4,761 | | | | 18,222 | | | 8,282 | 20 | 79,070 | 78,925 | 78,743 | | |
| | | | | | | | | | | | | 10,353 | — | 84,430 | — | 84,103 | | |
| | | | | | | | | | | | | 12,423 | — | 89,598 | — | 89,271 | | |

Размеры, мм

| Обозначение протяжки | $D \times m$ | Сочетание полей допусков $D$ и $e$ | $x_1$ | $x_2$ | $x_3$ | $y_1$ | $y_2$ | $y_3$ | $x_0$ | $y_0$ | $R$ | $d_p$ | $W$ | $M$ на буртике | $M$ на зубе номер $W$ | $M$ на последнем калибрующем зубе | $d_{p1}$ | $M_1$ (на передней направляющей) |
|---|---|---|---|---|---|---|---|---|---|---|---|---|---|---|---|---|---|---|
| 2403-3721 | 70×4 | H7—9H | 2,313 | 3,466 | 4,749 | 31,405 | 33,044 | 34,512 | 18,194 | 21,461 | 18,738 | 8,282 | 17 | 78,958 | 78,819 | 78,633 | 10,950 | 84,36 |
| | | | | | | | | | | | | 10,353 | — | 84,327 | — | 84,002 | | |
| | | | | | | | | | | | | 12,423 | — | 89 500 | — | 89,175 | | |
| 2403-3722 | | H8—11H | 2,272 | 3,425 | 4,708 | | | | 18,153 | | | 8,282 | 17 | 79,066 | 78,927 | 78,741 | | |
| | | | | | | | | | | | | 10,353 | — | 84,423 | — | 84,098 | | |
| | | | | | | | | | | | | 12,423 | — | 89,588 | — | 89 263 | | |
| 2403-3724 | 75×4 | H7—9H | 2,362 | 3,502 | 4,840 | 33,938 | 35,503 | 37,016 | 19,664 | 22,545 | 20,716 | 8,282 | 19 | 83,472 | 83,335 | 83,139 | | 88,89 |
| | | | | | | | | | | | | 10,353 | — | 88,808 | — | 88,475 | | |
| | | | | | | | | | | | | 12,423 | — | 93,967 | — | 93,635 | | |
| 2403-3725 | | H8—11H | 2,321 | 3,460 | 4,799 | | | | 19,622 | | | 8,282 | 19 | 83 579 | 83,442 | 83,246 | | |
| | | | | | | | | | | | | 10,353 | — | 88,905 | — | 88,572 | | |
| | | | | | | | | | | | | 12,423 | — | 94,056 | — | 93,723 | | |
| 2403-3727 | | H7 –9H | 2,362 | 3,564 | 4,876 | | 35,578 | 32,048 | 19,682 | 22,507 | 20,752 | 8,282 | 16 | 83,466 | 83,335 | 83,151 | | |
| | | | | | | | | | | | | 10 353 | — | 88,800 | — | 88,484 | | |
| | | | | | | | | | | | | 12,423 | — | 93,958 | — | 93,642 | | |
| 2403-3728 | | H8—11H | 2,320 | 3,522 | 4,835 | | | | 19,640 | | | 8,282 | 16 | 83,573 | 83,442 | 83,258 | | |
| | | | | | | | | | | | | 10,353 | — | 88,897 | — | 88,581 | | |
| | | | | | | | | | | | | 12,423 | — | 94,046 | — | 93,731 | | |
| 2403-3731 | 80×4 | H7 –9H | 2,415 | 3,593 | 4,958 | 36,460 | 38,026 | 39,542 | 21,127 | 23,608 | 22,701 | 8,282 | 19 | 88,623 | 88,485 | 88,296 | | 94,08 |
| | | | | | | | | | | | | 10,353 | — | 93,955 | — | 93,628 | | |
| | | | | | | | | | | | | 12,423 | — | 99,125 | — | 98,798 | | |
| 2403-3732 | | H8—11H | 2,373 | 3,551 | 4,915 | | | | 21,085 | | | 8,282 | 19 | 88,730 | 88,593 | 88,403 | | |
| | | | | | | | | | | | | 10,353 | — | 94,053 | — | 93,726 | | |
| | | | | | | | | | | | | 12,423 | — | 99,215 | — | 98,888 | | |
| 2403-3734 | | H7—9H | 2,415 | 3,657 | 4,994 | | 38,101 | 39,573 | 21,139 | 23 571 | 22 731 | 8,282 | 16 | 88,618 | 88,486 | 88,301 | | |
| | | | | | | | | | | | | 10,353 | — | 93,948 | — | 93,631 | | |
| | | | | | | | | | | | | 12,423 | — | 99,115 | — | 98,798 | | |
| 2403-3735 | | H8—11H | 2,372 | 3,615 | 4,952 | | | | 21,097 | | | 8,282 | 16 | 88,725 | 88,594 | 88,408 | | |
| | | | | | | | | | | | | 10,353 | — | 94,046 | — | 93,729 | | |
| | | | | | | | | | | | | 12,423 | — | 99,206 | — | 98,889 | | |

*Продолжение табл. 7*

Размеры, мм

| Обозначение протяжки | $D \times m$ | Сочетание полей допусков $D$ и $e$ | $x_1$ | $x_2$ | $x_3$ | $y_1$ | $y_2$ | $y_3$ | $x_0$ | $y_0$ | $R$ | $d_p$ | $W$ | $M$ на буртике | $M$ на зубе номер $W$ | $M$ на последнем калибрующем зубе | $d_{p1}$ | $M_1$ (на передней направляющей) |
|---|---|---|---|---|---|---|---|---|---|---|---|---|---|---|---|---|---|---|
| 2403-3737 | 85×4 | H7—9H | 2,319 | 3,335 | 4,529 | 38,941 | 40,529 | 42,078 | 21,331 | 27,896 | 21,988 | 8,282 | 21 | 94,265 | 94,114 | 93,931 | | 99,77 |
| | | | | | | | | | | | | 10,353 | — | 99,795 | — | 99,461 | | |
| | | | | | | | | | | | | 10,950 | — | 101,348 | — | 101,014 | | |
| 2403-3738 | | H8—11H | 2,278 | 3,294 | 4,488 | | | | 21,291 | | | 8,282 | 21 | 94,379 | 94,228 | 94,045 | | |
| | | | | | | | | | | | | 10,353 | — | 99,898 | — | 99,564 | | |
| | | | | | | | | | | | | 10,950 | — | 101,448 | — | 101,114 | | |
| 2403-3741 | | H7—9H | 2,319 | 3,390 | 4,561 | | 40,605 | 42,111 | 21,356 | 27,856 | 22,029 | 8,282 | 18 | 94,258 | 94,111 | 103 933 | | |
| | | | | | | | | | | | | 10,353 | — | 99,786 | — | 99,461 | | |
| | | | | | | | | | | | | 10,950 | — | 101,338 | — | 101 013 | | |
| 2403-3742 | | H8—11H | 2,278 | 3,350 | 4,520 | | | | 21 315 | | | 8,282 | 18 | 94,372 | 94,225 | 94,047 | | |
| | | | | | | | | | | | | 10,353 | — | 99 888 | — | 99,563 | | |
| | | | | | | | | | | | | 10,950 | — | 101,438 | — | 101,113 | | |
| 2403-3744 | 90×4 | H7—9H | 2,348 | 3,406 | 4,631 | 41,469 | 43,056 | 44,607 | 22,912 | 28,910 | 24,095 | 8,282 | 20 | 98.865 | 98,721 | 98,532 | 10,950 | 104,39 |
| | | | | | | | | | | | | 10,353 | — | 104,357 | — | 104,024 | | |
| | | | | | | | | | | | | 10,950 | — | 105,903 | — | 105,570 | | |
| 2403-3745 | | H8—11H | 2,307 | 3,365 | 4,590 | | | | 22,871 | | | 8,282 | 20 | 98,978 | 98,834 | 98,645 | | |
| | | | | | | | | | | | | 10,353 | — | 104,459 | — | 104,126 | | |
| | | | | | | | | | | | | 10,950 | — | 106,003 | — | 105,669 | | |
| 2403-3747 | | H7—9H | 2,348 | 3,464 | 4,664 | | 43,132 | 44,639 | 22,882 | 28,904 | 24,073 | 8,282 | 17 | 98,860 | 98,721 | 98,544 | | |
| | | | | | | | | | | | | 10,353 | — | 104,348 | — | 104,032 | | |
| | | | | | | | | | | | | 10,950 | — | 105,894 | — | 105,578 | | |
| 2403-3748 | | H8—11H | 2,307 | 3,423 | 4,623 | | | | 22,841 | | | 8,282 | 17 | 98,973 | 98,834 | 98,657 | | |
| | | | | | | | | | | | | 10,353 | — | 104,451 | — | 104,135 | | |
| | | | | | | | | | | | | 10,950 | — | 105,994 | — | 105,678 | | |
| 2403-3751 | 95×4 | H7—9H | 2,382 | 3,476 | 4,728 | 43,986 | 45,573 | 47,125 | 24,368 | 30,003 | 26,056 | 8,282 | 19 | 103,968 | 103,830 | 103,641 | | 109,51 |
| | | | | | | | | | | | | 10,353 | — | 109,443 | — | 109,116 | | |
| | | | | | | | | | | | | 10,950 | — | 110,988 | — | 110,661 | | |
| 2403-3752 | | H8—11H | 2,340 | 3,435 | 4,686 | | | | 24,326 | | | 8,282 | 19 | 104,081 | 103,943 | 103,754 | | |
| | | | | | | | | | | | | 10,353 | — | 109,546 | — | 109,219 | | |
| | | | | | | | | | | | | 10,950 | — | 111,088 | — | 110,761 | | |

Размеры, мм

| Обозначение протяжки | $D \times m$ | Сочетание полей допусков $D$ и $e$ | $x_1$ | $x_2$ | $x_3$ | $y_1$ | $y_2$ | $y_3$ | $x_0$ | $y_0$ | $R$ | $d_p$ | $W$ | $M$ на буртике | $M$ на зубе номер $W$ | $M$ на последнем калибрующем зубе | $d_{p1}$ | $M_1$ (на передней направляющей) |
|---|---|---|---|---|---|---|---|---|---|---|---|---|---|---|---|---|---|---|
| 2403-3754 | 95×4 | H7—9H | 2,382 | 3,535 | 4,761 | 43,986 | 45,649 | 47,158 | 24,384 | 29,963 | 26,091 | 8,282 | 16 | 103,963 | 103,832 | 103,646 | | 109,51 |
| | | | | | | | | | | | | 10,353 | — | 109,436 | — | 109,119 | | |
| | | | | | | | | | | | | 10,950 | — | 110,980 | — | 110,663 | | |
| 2403-3755 | | H8—11H | 2,340 | 3,494 | 4,719 | | | | 24,342 | | | 8,282 | 16 | 104,076 | 103,945 | 103,759 | | |
| | | | | | | | | | | | | 10,353 | — | 109,539 | — | 109,222 | | |
| | | | | | | | | | | | | 10,950 | — | 111,080 | — | 110,763 | | |
| 2403-3757 | 100×4 | H7—9H | 2,333 | 3,296 | 4,411 | 46,466 | 48,068 | 49,641 | 24,425 | 34,271 | 25,235 | 7,000 | 19 | 105,827 | 105,689 | 105,493 | | 115,08 |
| | | | | | | | | | | | | 8,690 | — | 110,614 | — | 110,280 | | |
| | | | | | | | | | | | | 10 950 | — | 116,734 | — | 116,400 | | |
| 2403-3758 | | H8—11H | 2,293 | 3,256 | 4,371 | | | | 24,385 | | | 7,000 | 19 | 105,955 | 105,818 | 105,621 | | |
| | | | | | | | | | | | | 8,690 | — | 110,731 | — | 110,397 | | |
| | | | | | | | | | | | | 10,950 | — | 116,838 | — | 116,504 | | |
| 2403-3761 | | H7—9H | 2,333 | 3,348 | 4,440 | | 48,145 | 49,674 | 24,436 | 34,239 | 25,260 | 7,000 | 16 | 105,823 | 105,692 | 105,506 | 10,950 | |
| | | | | | | | | | | | | 8,690 | — | 110,607 | — | 110,290 | | |
| | | | | | | | | | | | | 10,950 | — | 116,724 | — | 116,407 | | |
| 2403-3762 | | H8—11H | 2,293 | 3,308 | 4,400 | | | | 24,396 | | | 7,000 | 16 | 105,952 | 105,821 | 105,635 | | |
| | | | | | | | | | | | | 8,690 | — | 110,724 | — | 110,407 | | |
| | | | | | | | | | | | | 10,950 | — | 116,829 | — | 116,512 | | |
| 2403-3764 | 105×4 | H7—9H | 2,344 | 3,345 | 4,489 | 48,984 | 50,585 | 52,159 | 25,981 | 35,327 | 27,299 | 7,000 | 19 | 110,540 | 110,403 | 110,214 | | 119,76 |
| | | | | | | | | | | | | 8,690 | — | 115,274 | — | 114,948 | | |
| | | | | | | | | | | | | 10,950 | — | 121,353 | — | 121,027 | | |
| 2403-3765 | | H8—11H | 2,303 | 3,304 | 4,448 | | | | 25,941 | | | 7,000 | 19 | 110,667 | 110,530 | 110,340 | | |
| | | | | | | | | | | | | 8,690 | — | 115,390 | — | 115,063 | | |
| | | | | | | | | | | | | 10,950 | — | 121,458 | — | 121,132 | | |
| 2403-3767 | | H7—9H | 2,344 | 3,398 | 4,519 | | 50,662 | 52,192 | 25,989 | 35,295 | 27,322 | 7,000 | 16 | 110,537 | 110,405 | 110,220 | | |
| | | | | | | | | | | | | 8,690 | — | 115,267 | — | 114,951 | | |
| | | | | | | | | | | | | 10,950 | — | 121,344 | — | 121,027 | | |
| 2403-3768 | | H8—11H | 2,303 | 3,358 | 4,478 | | | | 25,948 | | | 7,000 | 16 | 110,663 | 110,532 | 110,347 | | |
| | | | | | | | | | | | | 8,690 | – | 115,383 | — | 115,067 | | |
| | | | | | | | | | | | | 10,950 | - | 121,448 | — | 121,132 | | |

*Продолжение табл 7*

Размеры, мм

| Обозначение протяжки | $D \times m$ | Сочетание полей допусков $D$ и $e$ | $x_1$ | $x_2$ | $x_3$ | $y_1$ | $y_2$ | $y_3$ | $x_0$ | $y_0$ | $R$ | $d_p$ | $W$ | $M$ на буртике | $M$ на зубе номер $W$ | $M$ на последнем калибрующем зубе | $d_{p1}$ | $M_1$ (на передней направляющей) |
|---|---|---|---|---|---|---|---|---|---|---|---|---|---|---|---|---|---|---|
| 2403-3771 | 110×4 | H7—9H | 2,357 | 3,391 | 4,561 | 51,496 | 53,098 | 54,672 | 27,495 | 36,403 | 29,321 | 8,282 | 20 | 119,242 | 119,097 | 118,915 | 10,950 | 124,87 |
| | | | | | | | | | | | | 10,353 | — | 124,839 | — | 124,512 | | |
| | | | | | | | | | | | | 10,950 | — | 126,418 | — | 126,091 | | |
| 2403 3772 | | H8—11H | 2,311 | 3,345 | 4,515 | | | | 27,449 | | | 8,282 | 20 | 119,374 | 119,229 | 119,047 | | |
| | | | | | | | | | | | | 10,353 | — | 124,960 | — | 124 633 | | |
| | | | | | | | | | | | | 10,950 | — | 126,536 | — | 126,209 | | |
| 2403-3774 | | H7 9H | 2,357 | 3,446 | 4,592 | | 53,174 | 54,705 | 27,517 | 36 358 | 29,363 | 8 282 | 18 | 119,236 | 119,088 | 118,919 | | |
| | | | | | | | | | | | | 10,353 | — | 124,831 | — | 124,514 | | |
| | | | | | | | | | | | | 10,950 | — | 126,408 | — | 126,091 | | |
| 2403-3775 | | H8—11H | 2,311 | 3,400 | 4,546 | | | | 27,471 | | | 8,282 | 18 | 119,368 | 119,220 | 119,051 | | |
| | | | | | | | | | | | | 10,353 | — | 124,952 | — | 124,635 | | |
| | | | | | | | | | | | | 10,950 | — | 126,526 | — | 126,209 | | |
| 2403-3777 | 120×4 | H7—9H | 2,389 | 3,478 | 4,690 | 56,480 | 58,082 | 59,658 | 30,461 | 38,580 | 33,293 | 8,282 | 19 | 128,969 | 128,832 | 128,635 | | 134,60 |
| | | | | | | | | | | | | 10,353 | — | 134,514 | — | 134,180 | | |
| | | | | | | | | | | | | 10,950 | — | 136,082 | — | 135,748 | | |
| 2403-3778 | | H8—11H | 2,343 | 3,431 | 4,643 | | | | 30,415 | | | 8,282 | 19 | 129,100 | 128,962 | 128,766 | | |
| | | | | | | | | | | | | 10,353 | — | 134,635 | — | 134,301 | | |
| | | | | | | | | | | | | 10,950 | — | 136,201 | — | 135,867 | | |
| 2403-3781 | | H7—9H | 2,389 | 3,535 | 4,722 | | 58,159 | 59,691 | 30,420 | 38,575 | 33,261 | 8,282 | 16 | 128,966 | 128,835 | 128,649 | | |
| | | | | | | | | | | | | 10,353 | | 134,508 | — | 134,191 | | |
| | | | | | | | | | | | | 10,950 | — | 136,075 | — | 135,758 | | |
| 2403-3782 | | H8—11H | 2,342 | 3,489 | 4,675 | | | | 30,373 | | | 8,282 | 16 | 129,096 | 128,965 | 128,779 | | |
| | | | | | | | | | | | | 10,353 | — | 134,628 | — | 134,311 | | |
| | | | | | | | | | | | | 10 950 | | 136,193 | — | 135,876 | | |
| 2403-3784 | 130×4 | H7—9H | 2,372 | 3,390 | 4,523 | 61,524 | 63,135 | 64,724 | 32,150 | 43,831 | 34,638 | 7,000 | 18 | 135,538 | 135,407 | 135,211 | | 144,86 |
| | | | | | | | | | | | | 8,690 | — | 140,286 | — | 139,960 | | |
| | | | | | | | | | | | | 10,950 | — | 146,424 | — | 146,098 | | |
| 2403-3785 | | H8—11H | 2,326 | 3,344 | 4,477 | | | | 32 105 | | | 7,000 | 18 | 135,681 | 135,550 | 135,354 | | |
| | | | | | | | | | | | | 8,690 | — | 140,419 | — | 140,093 | | |
| | | | | | | | | | | | | 10,950 | — | 146,547 | — | 146,220 | | |

*Продолжение табл 7*

Размеры, мм

| Обозначение протяжки | $D \times m$ | Сочетание полей допусков $D$ и $e$ | $x_1$ | $x_2$ | $x_3$ | $y_1$ | $y_2$ | $y_3$ | $x_0$ | $y_0$ | $R$ | $d_p$ | $W$ | $M$ на буртике | $M$ на зубе номер $W$ | $M$ на последнем калибрующем зубе | $d_{p1}$ | $M_1$ (на передней направляющей) |
|---|---|---|---|---|---|---|---|---|---|---|---|---|---|---|---|---|---|---|
| 2403-3787 | 130×4 | H7—9H | 2,372 | 3,444 | 4,552 | 61,524 | 63,212 | 64,758 | 32,127 | 43,813 | 34,628 | 7,000 | 15 | 135,536 | 135,413 | 135,220 | 10,950 | 144,86 |
| | | | | | | | | | | | | 8,690 | — | 140,281 | — | 139,965 | | |
| | | | | | | | | | | | | 10,950 | — | 146,416 | — | 146,100 | | |
| 2403-3788 | | H8—11H | 2,326 | 3,398 | 4,506 | | | | 32,082 | | | 7,000 | 15 | 135,679 | 135,556 | 135,363 | | |
| | | | | | | | | | | | | 8,690 | — | 140,415 | — | 140,098 | | |
| | | | | | | | | | | | | 10,950 | — | 146,539 | — | 146,222 | | |
| 2403-3791 | 70×5 | H7—9H | 2,961 | 4,708 | 6,715 | 30,411 | 32,438 | 34,223 | 19,127 | 18,244 | 20,233 | 10,950 | 19 | 81,805 | 81,666 | 81,458 | 17,362 | 95,65 |
| | | | | | | | | | | | | 13,133 | — | 87,176 | — | 86,830 | | |
| | | | | | | | | | | | | 17,362 | — | 97,229 | — | 96,883 | | |
| 2403-3792 | | H8—11H | 2,913 | 4,659 | 6,667 | | | | 19,078 | | | 10,950 | 19 | 81,913 | 81,774 | 81,566 | | |
| | | | | | | | | | | | | 13,133 | — | 87,275 | — | 86,929 | | |
| | | | | | | | | | | | | 17,362 | — | 97,315 | — | 96,968 | | |
| 2403-3794 | 75×5 | H7—9H | 2,989 | 4,601 | 6,539 | 32,965 | 34,897 | 36,720 | 20,282 | 20,171 | 21,511 | 10,950 | 19 | 86,354 | 86,216 | 86,003 | 17,362 | 100,24 |
| | | | | | | | | | | | | 13,133 | — | 91,743 | — | 91,392 | | |
| | | | | | | | | | | | | 17,362 | — | 101,827 | — | 101,476 | | |
| 2403-3795 | | H8—11H | 2,941 | 4,553 | 6,490 | | | | 20,233 | | | 10,950 | 19 | 86,463 | 86,326 | 86,112 | | |
| | | | | | | | | | | | | 13,133 | — | 91,843 | — | 91,492 | | |
| | | | | | | | | | | | | 17,362 | — | 101,914 | — | 101,563 | | |
| 2403-3797 | 80×5 | H7—9H | 3,009 | 4,598 | 6,490 | 35,508 | 37,453 | 39,300 | 21,520 | 22,014 | 22,907 | 10,950 | 19 | 91,999 | 91,860 | 91,652 | | 106,03 |
| | | | | | | | | | | | | 13,133 | — | 97,450 | — | 97,104 | | |
| | | | | | | | | | | | | 17,362 | — | 107,648 | — | 107,302 | | |
| 2403-3798 | | H8—11H | 2,961 | 4,550 | 6,442 | | | | 21,472 | | | 10,950 | 19 | 92,110 | 91,972 | 91,764 | | |
| | | | | | | | | | | | | 13,133 | — | 97,553 | — | 97,206 | | |
| | | | | | | | | | | | | 17,362 | — | 107,737 | — | 107,391 | | |
| 2403-3801 | 85×5 | H7—9H | 3,040 | 4,610 | 6,464 | 38,064 | 40,019 | 41,887 | 22,768 | 23,841 | 24,320 | 10,950 | 19 | 96,612 | 96,474 | 96,274 | | 110,67 |
| | | | | | | | | | | | | 13,133 | — | 102,081 | — | 101,743 | | |
| | | | | | | | | | | | | 17,362 | — | 112,313 | — | 111,976 | | |
| 2403-3802 | | H8—11H | 2,992 | 4,562 | 6,416 | | | | 22,720 | | | 10,950 | 19 | 96,725 | 96,587 | 96,387 | | |
| | | | | | | | | | | | | 13,133 | — | 102,185 | — | 101,847 | | |
| | | | | | | | | | | | | 17,362 | — | 112,404 | — | 112,066 | | |

*Продолжение табл. 7*

Размеры, мм

| Обозначение протяжки | $D \times m$ | Сочетание полей допусков $D$ и $e$ | $x_1$ | $x_2$ | $x_3$ | $y_1$ | $y_2$ | $y_3$ | $x_e$ | $y_e$ | $R$ | $d_p$ | $W$ | $M$ на буртике | $M$ на зубе номер $W$ | $M$ на последнем калибрующем зубе | $d_{p1}$ | $M_1$ (на передней направляющей) |
|---|---|---|---|---|---|---|---|---|---|---|---|---|---|---|---|---|---|---|
| 2403-3804 | 90×5 | H7—9H | 2,968 | 4,599 | 6,416 | 40,476 | 42,560 | 44,445 | 23,920 | 25,757 | 25,606 | 10,950 | 19 | 102,166 | 102,028 | 101,820 | 17,362 | 116,34 |
| | | | | | | | | | | | | 13,133 | — | 107,688 | — | 107,341 | | |
| | | | | | | | | | | | | 17,362 | — | 118,016 | — | 117,670 | | |
| 2403-3805 | | H8—11H | 2,920 | 4,551 | 6,369 | | | | 23,873 | | | 10,950 | 19 | 102,281 | 102,143 | 101,935 | | |
| | | | | | | | | | | | | 13,133 | — | 107,794 | — | 107,448 | | |
| | | | | | | | | | | | | 17,362 | — | 118,109 | — | 117,763 | | |
| 2403-3807 | 95×5 | H7—9H | 2,914 | 4,162 | 5,671 | 43,072 | 45,078 | 47,027 | 23,545 | 31,632 | 23,590 | 8,690 | 19 | 102,033 | 101,894 | 101,686 | 13,133 | 112,08 |
| | | | | | | | | | | | | 10 950 | — | 108,309 | — | 107,963 | | |
| | | | | | | | | | | | | 13,133 | — | 114,095 | — | 113,749 | | |
| 2403-3808 | | H8—11H | 2,869 | 4,117 | 5,626 | | | | 23,500 | | | 8,690 | 19 | 102,174 | 102,035 | 101,827 | | |
| | | | | | | | | | | | | 10,950 | — | 108,433 | — | 108,087 | | |
| | | | | | | | | | | | | 13,133 | — | 114,207 | — | 113,861 | | |
| 2403-3811 | 100×5 | H7—9H | 3,020 | 4,525 | 6,271 | 45,570 | 47,554 | 49,472 | 26,276 | 29,501 | 28,267 | 10,950 | 19 | 112,300 | 112,162 | 111,954 | 17,362 | 126,62 |
| | | | | | | | | | | | | 13,133 | — | 117,883 | — | 117,536 | | |
| | | | | | | | | | | | | 17,362 | — | 128,327 | — | 127,980 | | |
| 2403-3812 | | H8—11H | 2,973 | 4,477 | 6,224 | | | | 26,229 | | | 10,950 | 19 | 112,418 | 112,280 | 112,072 | | |
| | | | | | | | | | | | | 13,133 | — | 117,992 | — | 117,645 | | |
| | | | | | | | | | | | | 17,362 | — | 128,423 | — | 128,076 | | |
| 2403-3814 | 105×5 | H7—9H | 2,893 | 4,128 | 5,600 | 48,033 | 50,049 | 52,018 | 25,759 | 35,408 | 26,119 | 8,690 | 19 | 112,047 | 111,908 | 111,693 | 13,133 | 122,18 |
| | | | | | | | | | | | | 10,950 | — | 118,365 | — | 118,012 | | |
| | | | | | | | | | | | | 13,133 | — | 124,201 | — | 123,848 | | |
| 2403-3815 | | H8—11H | 2,848 | 4,083 | 5,555 | | | | 25,714 | | | 8,690 | 19 | 112,189 | 112,050 | 111,835 | | |
| | | | | | | | | | | | | 10,950 | — | 118,492 | — | 118,138 | | |
| | | | | | | | | | | | | 13,133 | — | 124,316 | — | 123,963 | | |
| 2403-3817 | 110×5 | H7—9H | 2,982 | 4,450 | 6,137 | 50,532 | 52,531 | 54,474 | 28,542 | 33,309 | 30,821 | 10,353 | 19 | 120,854 | 120,715 | 120,500 | 16,565 | 134,92 |
| | | | | | | | | | | | | 13,133 | — | 128,061 | — | 127,707 | | |
| | | | | | | | | | | | | 16,565 | — | 136,653 | — | 136,299 | | |
| 2403-3818 | | H8—11H | 2,935 | 4,402 | 6,090 | | | | 28,495 | | | 10,353 | 19 | 120,976 | 120,838 | 120,623 | | |
| | | | | | | | | | | | | 13,133 | — | 128,172 | — | 127,819 | | |
| | | | | | | | | | | | | 16,565 | — | 136,753 | — | 136,400 | | |

*Продолжение табл. 7*

Размеры, мм

| Обозначение прогяжки | $D \times m$ | Сочетание полей допусков $D$ и $e$ | $x_1$ | $x_2$ | $x_3$ | $y_1$ | $y_2$ | $y_3$ | $x_0$ | $y_0$ | $R$ | $d_p$ | $W$ | $M$ на буртике | $M$ на зубе номер $W$ | $M$ на последнем калибрующем зубе | $d_{p1}$ | $M_1$ (на передней направляющей) |
|---|---|---|---|---|---|---|---|---|---|---|---|---|---|---|---|---|---|---|
| 2403-3821 | 120×5 | H7—9H | 3,006 | 4,453 | 6,101 | 55,589 | 57,597 | 59,557 | 30,919 | 37,012 | 33,529 | 10,353 | 19 | 130,958 | 130,819 | 130,611 | 16,565 | 145,13 |
| | | | | | | | | | | | | 13,133 | — | 138,226 | — | 137,879 | | |
| | | | | | | | | | | | | 16,000 | — | 145,487 | — | 145,141 | | |
| 2403-3822 | | H8—11H | 2,954 | 4,401 | 6,048 | | | | 30,867 | | | 10,353 | 19 | 131,096 | 130,958 | 130,750 | | |
| | | | | | | | | | | | | 13,133 | — | 138,352 | — | 138,006 | | |
| | | | | | | | | | | | | 16,000 | — | 145,604 | — | 145,257 | | |
| 2403-3824 | 130×5 | H7—9H | 2,965 | 4,385 | 5,991 | 60,547 | 62,566 | 64,541 | 33,160 | 40,815 | 36,071 | 10,353 | 18 | 141,057 | 140,926 | 140,704 | | 155,31 |
| | | | | | | | | | | | | 13,133 | — | 148,380 | — | 148,027 | | |
| | | | | | | | | | | | | 16,000 | — | 155,700 | — | 155,346 | | |
| 2403-3825 | | H8—11H | 2,913 | 4,333 | 5,939 | | | | 33,108 | | | 10,353 | 18 | 141,198 | 141,066 | 140,844 | | |
| | | | | | | | | | | | | 13,133 | — | 148,509 | — | 148,155 | | |
| | | | | | | | | | | | | 16,000 | — | 155,818 | — | 155,465 | | |

Таблица 8

Размеры, мм

| Обозначение протяжки | | | 2403-3571 | 2403-3572 | 2403-3574 | 2403-3575 | 2403-3577 2403-3581 | 2403-3578 2403-3582 | 2403-3584 2403-3587 | 2403-3585 2403-3588 | 2403-3591 2403-3594 | 2403-3592 2403-3595 | 2403-3597 2403-3601 | 2403-3598 2403-3602 |
|---|---|---|---|---|---|---|---|---|---|---|---|---|---|---|
| Сочетание полей допусков $D$ и $e$ | | | H7—9H | H8—11H | H7—9H | H8—11H | H7—9H | H8—11H | H7-9H | H8—11H | H7—9H | H8—11H | H7—9H | H8—11H |
| $D \times m$ | | | 70×3 | | 75×3 | | 80×3 | | 85×3 | | 90×3 | | 95×3 | |
| Номера и диаметры $D_i$ зубьев | черновых и переходных | 1 | 64,880 | 64,880 | 69,840 | 69,840 | 74,860 | 74,860 | 79,900 | 79,900 | 84,860 | 84,860 | 89,900 | 89,900 |
| | | 2 | 65,080 | 65,080 | 70,040 | 70,040 | 75,060 | 75,060 | 80,100 | 80,100 | 85,060 | 85,060 | 90,100 | 90,100 |
| | | 3 | 65,280 | 65,280 | 70,240 | 70,240 | 75,260 | 75,260 | 80,300 | 80 300 | 85,260 | 85,260 | 90,300 | 90,300 |
| | | 4 | 65,480 | 65,480 | 70,440 | 70,440 | 75,460 | 75,460 | 80,500 | 80,500 | 85,460 | 85,460 | 90,500 | 90,500 |
| | | 5 | 65,680 | 65,680 | 70,640 | 70,640 | 75,660 | 75,660 | 80,700 | 80,700 | 85,660 | 85,660 | 90,700 | 90,700 |
| | | 6 | 65,880 | 65,880 | 70,840 | 70,840 | 75,860 | 75,860 | 80,900 | 80,900 | 85,860 | 85,860 | 90,900 | 90,900 |
| | | 7 | 66,080 | 66,080 | 71,040 | 71,040 | 76,060 | 76,060 | 81,100 | 81,100 | 86,060 | 86,060 | 91,100 | 91,100 |
| | | 8 | 66,280 | 66,280 | 71,240 | 71,240 | 76,260 | 76,260 | 81,300 | 81,300 | 86,260 | 86,260 | 91,300 | 91,300 |
| | | 9 | 66,480 | 66,480 | 71,440 | 71,440 | 76,460 | 76,460 | 81,500 | 81,500 | 86,460 | 86,460 | 91,500 | 91,500 |
| | | 10 | 66,680 | 66,680 | 71,640 | 71,640 | 76,660 | 76,660 | 81,700 | 81,700 | 86,660 | 86,660 | 91,700 | 91,700 |
| | | 11 | 66,880 | 66,880 | 71,840 | 71,840 | 76,860 | 76,860 | 81,900 | 81,900 | 86,860 | 86,860 | 91,900 | 91,900 |
| | | 12 | 67,080 | 67,080 | 72,040 | 72,040 | 77,060 | 77,060 | 82,100 | 82,100 | 87,060 | 87,060 | 92,100 | 92,100 |
| | | 13 | 67,280 | 67,280 | 72,240 | 72,240 | 77,260 | 77,260 | 82,300 | 82,300 | 87,260 | 87,260 | 92,300 | 92,300 |
| | | 14 | 67,480 | 67,480 | 72,440 | 72,440 | 77,460 | 77,460 | 82,500 | 82,500 | 87,460 | 87,460 | 92,500 | 92,500 |
| | | 15 | 67,680 | 67,680 | 72,640 | 72,640 | 77,660 | 77,660 | 82,700 | 82,700 | 87,660 | 87,660 | 92,700 | 92,700 |
| | | 16 | 67,880 | 67,880 | 72,840 | 72,840 | 77,860 | 77,860 | 82,900 | 82,900 | 87,860 | 87,860 | 92,900 | 92,900 |
| | | 17 | 68,080 | 68,080 | 73,040 | 73,040 | 78,060 | 78,060 | 83,100 | 83,100 | 88,060 | 88,060 | 93,100 | 93,100 |
| | | 18 | 68,280 | 68,280 | 73,240 | 73,240 | 78,260 | 78,260 | 83,300 | 83,300 | 88,260 | 88,260 | 93 300 | 93,300 |
| | | 19 | 68,480 | 68,480 | 73,440 | 73,440 | 78,460 | 78,460 | 83,500 | 83 500 | 88,460 | 88,460 | 93,500 | 93,500 |
| | | 20 | 68,680 | 68,680 | 73,640 | 73,640 | 78,660 | 78,660 | 83,700 | 83,700 | 88,660 | 88,660 | 93,700 | 93,700 |

Размеры, мм

| Номера и диаметры $D_i$ зубьев | | Обозначение протяжки | 2403-3571 | 2 03-3572 | 2403-3574 | 2403-3575 | 2403-3577 2403-3581 | 2403-3578 2403-3582 | 2403-3584 2403-3587 | 2403-3585 2403-3588 | 2403-3591 2403-3594 | 2403-3592 2403-3595 | 2403-3597 2403-3601 | 2403-3598 2403-3602 |
|---|---|---|---|---|---|---|---|---|---|---|---|---|---|---|
| | | Сочетание полей допусков $D$ и $e$ | H7—9H | H8-11H | H7-9H | H8—11H | H7—9H | H8-11H | H7—9H | H8—11H | H7—9H | H8-11H | H7—9H | H8—11H |
| | | $D \times m$ | 70×3 | | 75×3 | | 80×3 | | 85×3 | | 90×3 | | 95×3 | |
| черновых и переходных | 21 | | 68,880 | 68,880 | 73,840 | 73,840 | 78,860 | 78,860 | 83,900 | 83,900 | 88,860 | 88,860 | 93,900 | 93,900 |
| | 22 | | 69,080 | 69,080 | 74,040 | 74,040 | 79,060 | 79,060 | 84,100 | 84,100 | 89,060 | 89,060 | 94,100 | 94,100 |
| | 23 | | 69,280 | 69,280 | 74,240 | 74,240 | 79,260 | 79,260 | 84,300 | 84,300 | 89,260 | 89,260 | 94,300 | 94,300 |
| | 24 | | 69,480 | 69,480 | 74,440 | 74,440 | 79,460 | 79,460 | 84,500 | 84,500 | 89,460 | 89,460 | 94,500 | 94,500 |
| | 25 | | 69,600 | 69,600 | 74,560 | 74,560 | 79,580 | 79,580 | 84,620 | 84,620 | 89,580 | 89,580 | 94,620 | 94,620 |
| | 26 | | 69,720 | 69,720 | 74,680 | 74,680 | 79,700 | 79,700 | 84,740 | 84,740 | 89,700 | 89,700 | 94,740 | 94,740 |
| | 27 | | 69,840 | 69,840 | 74,800 | 74,800 | 79,820 | 79,820 | 84,840 | 84,840 | 89,820 | 89,820 | 94,840 | 94,840 |
| | 28 | | 69,900 | 69,900 | 74,890 | 74,890 | 79,890 | 79,890 | 84,910 | 84,910 | 89,900 | 89,900 | 94,910 | 94,910 |
| | 29 | | 69,940 | 69,940 | 74,940 | 74,940 | 79,940 | 79,940 | 84,950 | 84,950 | 89,950 | 89,950 | 94,950 | 94,950 |
| чистовых | 30 | | 69,970 | 69,970 | 74,970 | 74,970 | 79,970 | 79,970 | 84,980 | 84,980 | 89,980 | 89,980 | 94,980 | 94,980 |
| | 31 | | 69,990 | 70,000 | 74,990 | 75,000 | 79,990 | 80,000 | 85,000 | 85,010 | 90,000 | 90,010 | 95,000 | 95,010 |
| | 32 | | 70,010 | 70,025 | 75,010 | 75,025 | 80,010 | 80,025 | 85 020 | 85,035 | 90,020 | 90,035 | 95,020 | 95,035 |
| | 33 | | 70,030 | 70,046 | 75,030 | 75,046 | 80,030 | 80,046 | 85,035 | 85,054 | 90,035 | 90,054 | 95,035 | 95,054 |
| калибрующих | 34 | | 70,030 | 70,046 | 75,030 | 75,046 | 80,030 | 80,046 | 85,035 | 85,054 | 90,035 | 90,054 | 95,035 | 95,054 |
| | 35 | | | | | | | | | | | | | |
| | 36 | | | | | | | | | | | | | |
| | 37 | | | | | | | | | | | | | |
| | 38 | | | | | | | | | | | | | |
| | 39 | | | | | | | | | | | | | |

*Продолжение табл. 8*

Размеры, мм

| Обозначение протяжки | | 2403-3604<br>2403-3607 | 2403-3605<br>2403-3608 | 2403-3611<br>2403-3614 | 2403-3612<br>2403-3615 | 2403-3617 | 2403-3618 | 2403-3621 | 2403-3622 | 2403-3624 | 2403-3625 | 2403-3627<br>2403-3631 | 2403-3628<br>2403-3632 |
|---|---|---|---|---|---|---|---|---|---|---|---|---|---|
| Сочетание полей допусков $D$ и $e$ | | H7—9H | H8—11H | H7—9H | H8—11H | H7—9H | H8—11H | H7—9H | H8—11H | H7—9H | H8—11H | H7—9H | H8—11H |
| $D \times m$ | | 100×3 | | 105×3 | | 110×3 | | 120×3 | | 130×3 | | 55×3,5 | |
| Номера и диаметры $D_i$ зубьев черновых и переходных | 1 | 94,870 | 94,870 | 99,900 | 99,900 | 104,900 | 104,900 | 114,900 | 114,900 | 124,900 | 124,900 | 48,950 | 48,950 |
| | 2 | 95,070 | 95,070 | 100,100 | 100,100 | 105,100 | 105,100 | 115,100 | 115,100 | 125,100 | 125,100 | 49,170 | 49,170 |
| | 3 | 95,270 | 95,270 | 100,300 | 100,300 | 105,300 | 105,300 | 115,300 | 115,300 | 125,300 | 125,300 | 49,390 | 49,390 |
| | 4 | 95,470 | 95,470 | 100,500 | 100,500 | 105,500 | 105,500 | 115,500 | 115,500 | 125,500 | 125,500 | 49,610 | 49,610 |
| | 5 | 95,670 | 95,670 | 100,700 | 100,700 | 105,700 | 105,700 | 115,700 | 115,700 | 125,700 | 125,700 | 49,830 | 49,830 |
| | 6 | 95,870 | 95,870 | 100,900 | 100,900 | 105,900 | 105,900 | 115,900 | 115,900 | 125,900 | 125,900 | 50,050 | 50,050 |
| | 7 | 96,070 | 96,070 | 101,100 | 101,100 | 106,100 | 106,100 | 116,100 | 116,100 | 126,100 | 126,100 | 50,270 | 50,270 |
| | 8 | 96,270 | 96,270 | 101,300 | 101,300 | 106,300 | 106,300 | 116,300 | 116,300 | 126,300 | 126,300 | 50,490 | 50,490 |
| | 9 | 96,470 | 96,470 | 101,500 | 101,500 | 106,500 | 106,500 | 116,500 | 116,500 | 126,500 | 126,500 | 50,710 | 50,710 |
| | 10 | 96,670 | 96,670 | 101,700 | 101,700 | 106,700 | 106,700 | 116,700 | 116,700 | 126,700 | 126,700 | 50,930 | 50 930 |
| | 11 | 96,870 | 96,870 | 101,900 | 101,900 | 106,900 | 106,900 | 116,900 | 116,900 | 126,900 | 126,900 | 51,150 | 51,150 |
| | 12 | 97,070 | 97,070 | 102,100 | 102,100 | 107,100 | 107,100 | 117,100 | 117,100 | 127,100 | 127,100 | 51,370 | 51,370 |
| | 13 | 97,270 | 97,270 | 102,300 | 102,300 | 107,300 | 107,300 | 117,300 | 117,300 | 127,300 | 127,300 | 51,590 | 51,590 |
| | 14 | 97,470 | 97,470 | 102,500 | 102,500 | 107,500 | 107,500 | 117,500 | 117,500 | 127,500 | 127,500 | 51,810 | 51,810 |
| | 15 | 97,670 | 97,670 | 102,700 | 102,700 | 107,700 | 107,700 | 117,700 | 117,700 | 127,700 | 127,700 | 52,030 | 52,030 |
| | 16 | 97,870 | 97,870 | 102,900 | 102,900 | 107,900 | 107,900 | 117,900 | 117,900 | 127,900 | 127,900 | 52,250 | 52,250 |
| | 17 | 98,070 | 98,070 | 103,100 | 103,100 | 108,100 | 108,100 | 118,100 | 118,100 | 128,100 | 128,100 | 52,470 | 52,470 |
| | 18 | 98,270 | 98,270 | 103,300 | 103,300 | 108,300 | 108,300 | 118,300 | 118,300 | 128,300 | 128,300 | 52,690 | 52,690 |
| | 19 | 98,470 | 98,470 | 103,500 | 103,500 | 108,500 | 108,500 | 118,500 | 118,500 | 128,500 | 128,500 | 52,910 | 52,910 |
| | 20 | 98,670 | 98,670 | 103,700 | 103,700 | 108,700 | 108,700 | 118,700 | 118,700 | 128,700 | 128,700 | 53,130 | 53,130 |

*Продолжение табл. 8*

Размеры, мм

| Обозначение протяжки | | 2403-3604<br>2403-3607 | 2403-3605<br>2403-3608 | 2403-3611<br>2403-3614 | 2403-3612<br>2403-3615 | 2403-3617 | 2403-3618 | 2403-3621 | 2403-3622 | 2403-3624 | 2403-3625 | 2403-3627<br>2403-3631 | 2403-3628<br>2403-3632 |
|---|---|---|---|---|---|---|---|---|---|---|---|---|---|
| Сочетание полей допусков $D$ и $e$ | | H7—9H | H8—11H | H7—9H | H8—11H | H7—9H | H8—11H | H7—9H | H8—11H | H7—9H | H8—11H | H7—9H | H8—11H |
| $D \times m$ | | 100×3 | | 105×3 | | 110×3 | | 120×3 | | 130×3 | | 55×3,5 | |
| Номера и диаметры $D_i$ зубьев | | | | | | | | | | | | | |
| черновых и переходных | 21 | 98,870 | 98,870 | 103,900 | 103,900 | 108,900 | 108,900 | 118,900 | 118,900 | 128,900 | 128,900 | 53,350 | 53,350 |
| | 22 | 99,070 | 99,070 | 104,100 | 104,100 | 109,100 | 109,100 | 119,100 | 119,100 | 129,100 | 129,100 | 53,570 | 53 570 |
| | 23 | 99,270 | 99,270 | 104,300 | 104,300 | 109,300 | 109,300 | 119,300 | 119,300 | 129,300 | 129,300 | 53,790 | 53,790 |
| | 24 | 99,470 | 99,470 | 104,500 | 104,500 | 109,500 | 109,500 | 119,500 | 119,500 | 129,500 | 129,500 | 54,010 | 54,010 |
| | 25 | 99,670 | 99,670 | 104,620 | 104,620 | 109,620 | 109,620 | 119,620 | 119,620 | 129,620 | 129,620 | 54,230 | 54,230 |
| | 26 | 99,790 | 99,790 | 104,740 | 104,740 | 109,740 | 109,740 | 119,740 | 119,740 | 129,740 | 129,740 | 54,450 | 54,450 |
| | 27 | 99,860 | 99,860 | 104,840 | 104,840 | 109,840 | 109,840 | 119,840 | 119,840 | 129,840 | 129,840 | 54,670 | 54,670 |
| | 28 | 99,910 | 99,910 | 104,910 | 104,910 | 109,910 | 109,910 | 119,910 | 119,910 | 129,910 | 129,910 | 54,790 | 54,790 |
| | 29 | 99,950 | 99,950 | 104,950 | 104,950 | 109,950 | 109,950 | 119,950 | 119,950 | 129,950 | 129,960 | 54,890 | 54,890 |
| чистовых | 30 | 99,980 | 99,980 | 104,980 | 104,980 | 109,980 | 109,980 | 119,980 | 119,980 | 129,980 | 129,990 | 54,940 | 54,940 |
| | 31 | 100,000 | 100,010 | 105,000 | 105,010 | 110,000 | 110,010 | 120,000 | 120,010 | 130,000 | 130 020 | 54,970 | 54,970 |
| | 32 | 100,020 | 100,035 | 105,020 | 105,035 | 110,020 | 110,035 | 120,020 | 120,035 | 130,020 | 130,045 | 54,990 | 55,000 |
| | 33 | 100,035 | 100,054 | 105,035 | 105,054 | 110,035 | 110,054 | 120,035 | 120,054 | 130,040 | 130,063 | 55,010 | 55,025 |
| калибрующих | 34 | 100,035 | 100,054 | 105,035 | 105,054 | 110,035 | 110,054 | 120,035 | 120,054 | 130,040 | 130,063 | 55,030 | 55,046 |
| | 35 | | | | | | | | | | | | |
| | 36 | | | | | | | | | | | | |
| | 37 | | | | | | | | | | | | |
| | 38 | | | | | | | | | | | 55,030 | 55,046 |
| | 39 | | | | | | | | | | | | |
| | 40 | — | — | — | — | — | — | — | — | — | — | | |

*Продолжение табл. 8*

Размеры, мм

| Номера и диаметры $D$, зубьев | | Обозначение протяжки | 2403-3634 2403-3637 | 2403-3635 2403-3638 | 2403-3641 2403-3644 | 2403-3642 2403-3645 | 2403-3647 2403-3651 | 2403-3648 2403-3652 | 2403-3654 2403-3657 | 2403-3655 2403-3658 | 2403-3661 2403-3664 | 2403-3662 2403-3665 | 2403-3667 2403-3671 | 2403-3668 2403-3672 |
|---|---|---|---|---|---|---|---|---|---|---|---|---|---|---|
| | | Сочетание полей допусков $D$ и $e$ | H7—9H | H8—11H | H7—9H | H8—11H | H7—9H | H8—11H | H7—9H | H8—11H | H7—9H | H8—11H | H7—9H | H8—11H |
| | | $D \times m$ | 60×3,5 | | 65×3,5 | | 70×3,5 | | 75×3,5 | | 80×3,5 | | 85×3,5 | |
| черновых и переходных | 1 | | 53,900 | 53,900 | 58,980 | 58,980 | 63,980 | 63,980 | 68,920 | 68,920 | 73,980 | 73,980 | 78,940 | 78 940 |
| | 2 | | 54,120 | 54,120 | 59,200 | 59,200 | 64,200 | 64,200 | 69,140 | 69,140 | 74,200 | 74,200 | 79,160 | 79,160 |
| | 3 | | 54,340 | 54,340 | 59,420 | 59,420 | 64,420 | 64,420 | 69,360 | 69,360 | 74,420 | 74,420 | 79,380 | 79,380 |
| | 4 | | 54,560 | 54,560 | 59,640 | 59,640 | 64,640 | 64,640 | 69,580 | 69,580 | 74,640 | 74,640 | 79,600 | 79,600 |
| | 5 | | 54,780 | 54,780 | 59,860 | 59,860 | 64,860 | 64,860 | 69,800 | 69,800 | 74,860 | 74,860 | 79,820 | 79,820 |
| | 6 | | 55,000 | 55,000 | 60,080 | 60,080 | 65,080 | 65,080 | 70,020 | 70,020 | 75,080 | 75,080 | 80,040 | 80 040 |
| | 7 | | 55,220 | 55,220 | 60,300 | 60,300 | 65,300 | 65,300 | 70,240 | 70,240 | 75,300 | 75,300 | 80,260 | 80,260 |
| | 8 | | 55,440 | 55,440 | 60,520 | 60,520 | 65,520 | 65,520 | 70,460 | 70,460 | 75,520 | 75,520 | 80,480 | 80,480 |
| | 9 | | 55,660 | 55,660 | 60,740 | 60,740 | 65,740 | 65,740 | 70,680 | 70,680 | 75,740 | 75,740 | 80,700 | 80,700 |
| | 10 | | 55,880 | 55,880 | 60,960 | 60,960 | 65,960 | 65,960 | 70,900 | 70,900 | 75,960 | 75,960 | 80,920 | 80,920 |
| | 11 | | 56,100 | 56,100 | 61,180 | 61,180 | 66,180 | 66,180 | 71,120 | 71,120 | 76,180 | 76,180 | 81,140 | 81,140 |
| | 12 | | 56,320 | 56,320 | 61,400 | 61,400 | 66,400 | 66,400 | 71,340 | 71,340 | 76,400 | 76,400 | 81,360 | 81,360 |
| | 13 | | 56,540 | 56,540 | 61,620 | 61,620 | 66,620 | 66,620 | 71,560 | 71,560 | 76,620 | 76,620 | 81,580 | 81,580 |
| | 14 | | 56,760 | 56,760 | 61,840 | 61,840 | 66,840 | 66,840 | 71,780 | 71,780 | 76,840 | 76,840 | 81,800 | 81,800 |
| | 15 | | 56,980 | 56,980 | 62,060 | 62,060 | 67,060 | 67,060 | 72,000 | 72,000 | 77,060 | 77,060 | 82,020 | 82,020 |
| | 16 | | 57,200 | 57,200 | 62,280 | 62,280 | 67,280 | 67,280 | 72,220 | 72,220 | 77,280 | 77,280 | 82,240 | 82,240 |
| | 17 | | 57,420 | 57,420 | 62,500 | 62,500 | 67,500 | 67,500 | 72,440 | 72,440 | 77,500 | 77,500 | 82,460 | 82,460 |
| | 18 | | 57,640 | 57,640 | 62,720 | 62,720 | 67,720 | 67,720 | 72,660 | 72,660 | 77,720 | 77,720 | 82,680 | 82,680 |
| | 19 | | 57,860 | 57,860 | 62 940 | 62,940 | 67,940 | 67,940 | 72,880 | 72,880 | 77,940 | 77,940 | 82,900 | 82,900 |
| | 20 | | 58,080 | 58,080 | 63,160 | 63,160 | 68,160 | 68,160 | 73,100 | 73,100 | 78,160 | 78,160 | 83,120 | 83,120 |
| | 21 | | 58,300 | 58,300 | 63,380 | 63,380 | 68,380 | 68,380 | 73,320 | 73,320 | 78,380 | 78,380 | 83,340 | 83,340 |

*Продолжение табл. 8*

Размеры, мм

| Обозначение протяжки | | 2403-3634 2403-3637 | 2403-3635 2403-3638 | 2403-3641 2403-3644 | 2403-3642 2403-3645 | 2403-3647 2403-3651 | 2403-3648 2403-3652 | 2403-3654 2403-3657 | 2403-3655 2403-3658 | 2403-3661 2403-3664 | 2403-3662 2403-3665 | 2403-3667 2403-3671 | 2403-3668 2403-3672 |
|---|---|---|---|---|---|---|---|---|---|---|---|---|---|
| Сочетание полей допусков $D$ и $e$ | | H7—9H | H8—11H | H7—9H | H8—11H | H7—9H | H8—11H | H7—9H | H8—11H | H7—9H | H8—11H | H7—9H | H8—11H |
| $D \times m$ | | 60×3,5 | | 65×3,5 | | 70×3,5 | | 75×3,5 | | 80×3,5 | | 85×3,5 | |
| Номера и диаметры $D_i$ зубьев | | | | | | | | | | | | | |
| черновых и переходных | 22 | 58,520 | 58,520 | 63,600 | 63,600 | 68,600 | 68,600 | 73,540 | 73,540 | 78,600 | 78,600 | 83,560 | 83,560 |
| | 23 | 58,740 | 58,740 | 63,820 | 63,820 | 68,820 | 68,820 | 73,760 | 73,760 | 78,820 | 78,820 | 83,780 | 83,780 |
| | 24 | 58,960 | 58,960 | 64,040 | 64,040 | 69,040 | 69,040 | 73,980 | 73,980 | 79,040 | 79,040 | 84,000 | 84,000 |
| | 25 | 59,180 | 59,180 | 64,260 | 64,260 | 69,260 | 69,260 | 74,200 | 74,200 | 79,260 | 79,260 | 84,220 | 84,220 |
| | 26 | 59,400 | 59,400 | 64,480 | 64,480 | 69,480 | 69,480 | 74,420 | 74,420 | 79,480 | 79,480 | 84,440 | 84,440 |
| | 27 | 59,620 | 59,620 | 64,600 | 64,600 | 69,600 | 69,600 | 74,640 | 74,640 | 79,600 | 79,600 | 84,660 | 84,660 |
| | 28 | 59,740 | 59,740 | 64,720 | 64,720 | 69,720 | 69,720 | 74,760 | 74,760 | 79,720 | 79,720 | 84,780 | 84,780 |
| | 29 | 59,830 | 59,830 | 64,810 | 64,810 | 69,810 | 69,810 | 74,880 | 74,880 | 79,810 | 79,810 | 84,880 | 84,880 |
| | 30 | 59,890 | 59,890 | 64,880 | 64,880 | 69,880 | 69,880 | 74,940 | 74,940 | 79,880 | 79,880 | 84,940 | 84,940 |
| | 31 | 59,940 | 59,940 | 64,940 | 64,940 | 69,940 | 69,940 | 74,970 | 74,970 | 79,940 | 79,940 | 84,980 | 84,980 |
| чистовых | 32 | 59,970 | 59,970 | 64,970 | 64,970 | 69,970 | 69,970 | 74,990 | 75,000 | 79,970 | 79,970 | 85,000 | 85,010 |
| | 33 | 59,990 | 60,000 | 64,990 | 65,000 | 69,990 | 70,000 | 75,010 | 75,025 | 79,990 | 80,000 | 85,020 | 85,035 |
| | 34 | 60,010 | 30,025 | 65,010 | 65,025 | 70,010 | 70,025 | 75,030 | 75,046 | 80,010 | 80,025 | 85,035 | 85,054 |
| | 35 | 60,030 | 60,046 | 65,030 | 65,046 | 70,030 | 70,046 | | | 80,030 | 80,046 | | |
| калибрующих | 36 | 60,030 | 60,046 | 65,030 | 65,046 | 70,030 | 70,046 | 75,030 | 75,046 | 80,030 | 80,046 | 85,035 | 85,054 |
| | 37 | | | | | | | | | | | | |
| | 38 | | | | | | | | | | | | |
| | 39 | | | | | | | | | | | | |
| | 40 | | | | | | | | | | | | |
| | 41 | | | | | | | — | — | | | — | — |

*Продолжение табл. 8*

Размеры, мм

| Обозначение протяжки | | 2403-3664<br>2403-3677 | 2403-3675<br>2403-3678 | 2403-3681<br>2403-3684 | 2403-3 82<br>2403-3 85 | 2403-3687 | 2403-3688 | 2403-3691 | 2403-3692 | 2403-3694 | 2403-3695 | 2403-3697 | 2403-3698 |
|---|---|---|---|---|---|---|---|---|---|---|---|---|---|
| Сочетание полей допусков $D$ и $e$ | | H7—9H | H8—11H | H7—9H | H8—11H | H7—9H | H8—11H | H7—9H | H8-11H | H7—9H | H8—11H | H7—9H | H8—11H |
| $D \times m$ | | 90×3,5 | | 95×3,5 | | 100×3,5 | | 105×3,5 | | 110×3,5 | | 120×3,5 | |
| Номера и диаметры $D_i$ зубьев | 1 | 83,940 | 83,940 | 89,000 | 89,000 | 93,960 | 93,960 | 98,980 | 98,980 | 104,000 | 104,000 | 114 000 | 114,000 |
| | 2 | 84,160 | 84,160 | 89,220 | 89,220 | 94,180 | 94,180 | 99,200 | 99,200 | 104,220 | 104,220 | 114 220 | 114,220 |
| | 3 | 84,380 | 84,380 | 89,440 | 89,440 | 94,400 | 94,400 | 99,420 | 99,420 | 104,440 | 104,440 | 114,440 | 114,440 |
| | 4 | 84,600 | 84,600 | 89,660 | 89 ,660 | 94,620 | 94,620 | 99,640 | 99,640 | 104,660 | 104,660 | 114,660 | 114,660 |
| | 5 | 84,820 | 84,820 | 89,880 | 89,880 | 94,840 | 94,840 | 99,860 | 99,860 | 104,880 | 104,880 | 114,880 | 114,880 |
| | 6 | 85,040 | 85,040 | 90,100 | 90,100 | 95,060 | 95,060 | 100,080 | 100,080 | 105,100 | 105,100 | 115,100 | 115,100 |
| | 7 | 85,260 | 85,260 | 90,320 | 90,320 | 95,280 | 95,280 | 100,300 | 100,300 | 105,320 | 105,320 | 115,320 | 115,320 |
| | 8 | 85,480 | 85,480 | 90,540 | 90,540 | 95,500 | 95,500 | 100,520 | 100,520 | 105,540 | 105,540 | 115,540 | 115,540 |
| | 9 | 85,700 | 85,700 | 90,760 | 90,760 | 95,720 | 95,720 | 100,740 | 100,740 | 105,760 | 105,760 | 115,760 | 115,760 |
| | 10 | 85,920 | 85,920 | 90,980 | 90,980 | 95,940 | 95,940 | 100,960 | 100,960 | 105,980 | 105,980 | 115,980 | 115,980 |
| | 11 | 86,140 | 86,140 | 91,200 | 91,200 | 96 160 | 96,160 | 101,180 | 101,180 | 106,200 | 106,200 | 116,200 | 116,200 |
| | 12 | 86,360 | 86,360 | 91,420 | 91,420 | 96,380 | 96,380 | 101,400 | 101,400 | 106,420 | 106,420 | 116,420 | 116,420 |
| | 13 | 86,580 | 86,580 | 91,640 | 91,640 | 96,600 | 96,600 | 101,620 | 101,620 | 106,640 | 106,640 | 116,640 | 116,640 |
| | 14 | 86,800 | 86,800 | 91,860 | 91,860 | 96,820 | 96,820 | 101,840 | 101 840 | 106,860 | 106,860 | 116,860 | 116,860 |
| | 15 | 87,020 | 87,020 | 92,080 | 92,080 | 97,040 | 97,040 | 102,060 | 102,060 | 107,080 | 107,080 | 117,080 | 117,080 |
| | 16 | 87,240 | 87,240 | 92,300 | 92,300 | 97,260 | 97,260 | 102,280 | 102,280 | 107,300 | 107,300 | 117,300 | 117,300 |
| | 17 | 87,460 | 87,460 | 92,520 | 92,520 | 97,480 | 97,480 | 102,500 | 102,500 | 107,520 | 107,520 | 117,520 | 117,520 |
| | 18 | 87,680 | 87,680 | 92,740 | 92,740 | 97,700 | 97,700 | 102,720 | 102,720 | 107,740 | 107,740 | 117,740 | 117,740 |
| | 19 | 87,900 | 87,900 | 92,960 | 92,960 | 97,920 | 97,920 | 102,940 | 102,940 | 107,960 | 107,960 | 117,960 | 117,960 |
| | 20 | 88,120 | 88,120 | 93,180 | 93,180 | 98,140 | 98,140 | 103,160 | 103,160 | 108,180 | 108,180 | 118,180 | 118,180 |
| | 21 | 88,340 | 88,340 | 93,400 | 93,400 | 98,360 | 98,360 | 103,380 | 103,380 | 108,400 | 108,400 | 118,400 | 118,400 |

черновых и переходных

*Продолжение табл. 8*

Размеры, мм

| Обозначение протяжки | | 2403-3674<br>2403-3677 | 2403-3675<br>2403-3678 | 2403-3681<br>2403-3684 | 2403-3682<br>2403-3685 | 2403-3687 | 2403-3688 | 2403-3691 | 2403-3692 | 2403-3694 | 2403-3695 | 2403-3697 | 2403-3698 |
|---|---|---|---|---|---|---|---|---|---|---|---|---|---|
| Сечение полей допусков $D$ и $e$ | | H7—9H | H8—11H | H7—9H | H8—11H | H7—9H | H8—11H | H7—9H | H8—11H | H7—9H | H8—11H | H7—9H | H8—11H |
| $D \times m$ | | 90×3,5 | | 95×3,5 | | 100×3,5 | | 105×3,5 | | 110×3,5 | | 120×3,5 | |
| Номера и диаметры $D$, зубьев | 22 | 88,560 | 88,560 | 93,620 | 93,620 | 98,580 | 98,580 | 103,600 | 103,600 | 108,620 | 108,620 | 118,620 | 118,620 |
| | 23 | 88,780 | 88,780 | 93,840 | 93,840 | 98,800 | 98,800 | 103,820 | 103,820 | 108,840 | 108,840 | 118,840 | 118,840 |
| | 24 | 89,000 | 89,000 | 94,060 | 94,060 | 99,020 | 99,020 | 104,040 | 104,040 | 109,060 | 109,060 | 119,060 | 119,060 |
| | 25 | 89,220 | 89,220 | 94,280 | 94,280 | 99,240 | 99,240 | 104,260 | 104,260 | 109,280 | 109,280 | 119,280 | 119,280 |
| | 26 | 89,440 | 89,440 | 94,500 | 94,500 | 99,460 | 99,460 | 104,480 | 104,480 | 109,500 | 109,500 | 119,500 | 119,500 |
| | 27 | 89,660 | 89,660 | 94,620 | 94,620 | 99,680 | 99,680 | 104,600 | 104,600 | 109,620 | 109,620 | 119,620 | 119,620 |
| | 28 | 89,780 | 89,780 | 94,740 | 94,740 | 99,800 | 99,800 | 104,720 | 104,720 | 109,740 | 109,740 | 119,740 | 119,740 |
| | 29 | 89,880 | 89,880 | 94,830 | 94,830 | 99,890 | 99,890 | 104,820 | 104,820 | 109,830 | 109,830 | 119,830 | 119,830 |
| | 30 | 89,940 | 89,940 | 94,900 | 94,900 | 99,950 | 99,950 | 104,900 | 104,900 | 109,900 | 109,900 | 119,900 | 119,900 |
| | 31 | 89,980 | 89,980 | 94,950 | 94,950 | 99,980 | 99,980 | 104,950 | 104,950 | 109,950 | 109,950 | 119,950 | 119,950 |
| | 32 | 90,000 | 90,010 | 94,980 | 94,980 | 100,000 | 100,010 | 104,980 | 104,980 | 109,980 | 109,980 | 119,980 | 119,980 |
| | 33 | 90,020 | 90,035 | 95,000 | 95,010 | 100,020 | 100,035 | 105,000 | 105,010 | 110,000 | 110,010 | 120,000 | 120,010 |
| | 34 | 90,035 | 90,054 | 95,020 | 95,035 | 100,035 | 100,054 | 105,020 | 105,035 | 110,020 | 110,035 | 120,020 | 120,035 |
| | 35 | 90,035 | 90,054 | 95,035 | 95,054 | 100,035 | 100,054 | 105,035 | 105,054 | 110,035 | 110,054 | 120,035 | 120,054 |
| | 36 | | | | | | | | | | | | |
| | 37 | | | | | | | | | | | | |
| | 38 | | | | | | | | | | | | |
| | 39 | | | 95,035 | 95,054 | | | 105,035 | 105,054 | 110,035 | 110,054 | 120,035 | 120,054 |
| | 40 | | | | | | | | | | | | |
| | 41 | — | — | | | — | — | | | | | | |

черновых и переходных

чистовых

калибрующих

*Продолжение табл. 8*

Размеры, мм

| Обозначение протяжки | | 2403-3701 | 2403-3702 | 2403-3704 | 2403-3705 | 2403-3707 | 2403-3708 | 2403-3711 | 2403-3712 | 2403-3714 | 2403-3715 | 2403-3717 | 2403-3718 |
|---|---|---|---|---|---|---|---|---|---|---|---|---|---|
| Сочетание полей допусков $D$ и $e$ | | H7—9H | H8—11H | H7—9H | H8—11H | H7—9H | H8—11H | H7—9H | H8—11H | H7—9H | H8—11H | H7—9H | H8-11H |
| $D \times m$ | | 130×3,5 | | 60×4 | | | | 65×4 | | | | 70×4 | |
| Номера и диаметры $D_1$ зубьев черновых и переходных | 1 | 123,980 | 123,980 | 53,020 | 53,020 | 53,010 | 53,010 | 58,120 | 58,120 | 58,120 | 58,120 | 62,980 | 62,980 |
| | 2 | 124,200 | 124,200 | 53,220 | 53,220 | 53,250 | 53,250 | 58,320 | 58,320 | 58,360 | 58,360 | 63,180 | 63,180 |
| | 3 | 124,420 | 124,420 | 53,420 | 53,420 | 53,490 | 53,490 | 58,520 | 58,520 | 58,600 | 58,600 | 63,380 | 63,380 |
| | 4 | 124,640 | 124,640 | 53,620 | 53,620 | 53,730 | 53,730 | 58,720 | 58,720 | 58,840 | 58,840 | 63,580 | 63,580 |
| | 5 | 124,860 | 124,860 | 53,820 | 53,820 | 53,970 | 53,970 | 58,920 | 58,920 | 59,080 | 59,080 | 63,780 | 63,780 |
| | 6 | 125,080 | 125,080 | 54,020 | 54,020 | 54,210 | 54,210 | 59,120 | 59,120 | 59,320 | 59,320 | 63,980 | 63,980 |
| | 7 | 125,300 | 125,300 | 54,220 | 54,220 | 54,450 | 54,450 | 59,320 | 59,320 | 59,560 | 59,560 | 64,180 | 64,180 |
| | 8 | 125,520 | 125,520 | 54,420 | 54,420 | 54,690 | 54,690 | 59,520 | 59,520 | 59,800 | 59,800 | 64,380 | 64,380 |
| | 9 | 125,740 | 125,740 | 54,620 | 54,620 | 54,930 | 54,930 | 59,720 | 59,720 | 60,040 | 60,040 | 64,580 | 64,580 |
| | 10 | 125,960 | 125,960 | 54,820 | 54,820 | 55,170 | 55,170 | 59,920 | 59,920 | 60,280 | 60,280 | 64,780 | 64,780 |
| | 11 | 126,180 | 126,180 | 55,020 | 55,020 | 55,410 | 55,410 | 60,120 | 60,120 | 60,520 | 60,520 | 64,980 | 64,980 |
| | 12 | 126,400 | 126,400 | 55,220 | 55,220 | 55,650 | 55,650 | 60,320 | 60,320 | 60,760 | 60,760 | 65,180 | 65,180 |
| | 13 | 126,620 | 126,620 | 55,420 | 55,420 | 55,890 | 55,890 | 60,520 | 60,520 | 61,000 | 61,000 | 65,380 | 65,380 |
| | 14 | 126,840 | 126,840 | 55,620 | 55,620 | 56,130 | 56,130 | 60,720 | 60,720 | 61,240 | 61,240 | 65,580 | 65,580 |
| | 15 | 127,060 | 127,060 | 55,820 | 55,820 | 56,370 | 56,370 | 60,920 | 60,920 | 61,480 | 61,480 | 65,780 | 65,780 |
| | 16 | 127,280 | 127,280 | 56,020 | 56,020 | 56,610 | 56,610 | 61,120 | 61,120 | 61,720 | 61,720 | 65,980 | 65,980 |
| | 17 | 127,500 | 127,500 | 56,220 | 56,220 | 56,850 | 56,850 | 61,320 | 61,320 | 61,960 | 61,960 | 66,180 | 66,180 |
| | 18 | 127,720 | 127,720 | 56,420 | 56,420 | 57,090 | 57,090 | 61,520 | 61,520 | 62,200 | 62,200 | 66,380 | 66,380 |
| | 19 | 127,940 | 127,940 | 56,620 | 56,620 | 57,330 | 57,330 | 61,720 | 61,720 | 62,440 | 62,440 | 66,580 | 66,580 |
| | 20 | 128,160 | 128,160 | 56,820 | 56,820 | 57,570 | 57,570 | 61,920 | 61,920 | 62,680 | 62,680 | 66,780 | 66,780 |
| | 21 | 128,380 | 128,380 | 57,020 | 57,020 | 57,810 | 57,810 | 62,120 | 62,120 | 62,920 | 62,920 | 66,980 | 66,980 |
| | 22 | 128,600 | 128,600 | 57,220 | 57,220 | 58,050 | 58,050 | 62,320 | 62,320 | 63,160 | 63,160 | 67,180 | 67,180 |
| | 23 | 128,820 | 128,820 | 57,420 | 57,420 | 58,290 | 58,290 | 62,520 | 62,520 | 63,400 | 63,400 | 67,380 | 67,380 |
| | 24 | 129,040 | 129,040 | 57,620 | 57,620 | 58,530 | 58,530 | 62,720 | 62,720 | 63,640 | 63,640 | 67,580 | 67,580 |
| | 25 | 129,260 | 129,260 | 57,820 | 57,820 | 58,770 | 58,770 | 62,920 | 62,920 | 63,880 | 63,880 | 67,780 | 67,780 |
| | 26 | 129,480 | 129,480 | 58,020 | 58,020 | 59,010 | 59,010 | 63,120 | 63,120 | 64,120 | 64,120 | 67,980 | 67,980 |

Размеры, мм

| Обозначение протяжки | | | 2403-3701 | 2403-3702 | 2403-3704 | 2403-3705 | 2403-3707 | 2403-3708 | 2403-3711 | 2403-3712 | 2403-3714 | 2403-3715 | 2403-3717 | 2403-3718 |
|---|---|---|---|---|---|---|---|---|---|---|---|---|---|---|
| Сочетание полей допусков $D$ и $e$ | | | H7—9H | H8—11H | H7—9H | H8—11H | H7—9H | H8—11H | H7—9H | H8—11H | H7—9H | H8—11H | H7—9H | H8—11H |
| $D \times m$ | | | 130×3,5 | | 60×4 | | | | 65×4 | | | | 70×4 | |
| Номера и диаметры $D_1$ зубьев | черновых и переходных | 27 | 129,600 | 129,600 | 58,220 | 58,220 | 59,250 | 59,250 | 63,320 | 63,320 | 64,360 | 64,360 | 68,180 | 68,180 |
| | | 28 | 129,720 | 129,720 | 58,420 | 58,420 | 59,490 | 59,490 | 63,520 | 63,520 | 64,480 | 64,480 | 68,380 | 68,380 |
| | | 29 | 129,820 | 129,820 | 58,620 | 58,620 | 59,610 | 59,610 | 63,720 | 63,720 | 64,600 | 64,600 | 68,580 | 68,580 |
| | | 30 | 129,900 | 129,900 | 58,820 | 58,820 | 59,730 | 59,730 | 63,920 | 63,920 | 64,720 | 64,720 | 68,780 | 68,780 |
| | | 31 | 129,950 | 129,950 | 59,020 | 59,020 | 59,820 | 59,820 | 64,120 | 64,120 | 64,820 | 64,820 | 68,980 | 68,980 |
| | чистовых | 32 | 129,980 | 129,980 | 59,220 | 59,220 | 59,890 | 59,890 | 64,320 | 64,320 | 64,890 | 64,890 | 69,180 | 69,180 |
| | | 33 | 130,000 | 130,020 | 59,420 | 59,420 | 59,940 | 59,940 | 64,520 | 64,520 | 64,940 | 64,940 | 69,380 | 69,380 |
| | | 34 | 130,020 | 130,045 | 59,520 | 59,520 | 59,970 | 59,970 | 64,620 | 64,620 | 64,970 | 64,970 | 69,580 | 69,580 |
| | | 35 | 130,040 | 130,063 | 59,620 | 59,620 | 59,990 | 60,000 | 64,720 | 64,720 | 64,990 | 65,000 | 69,680 | 69,680 |
| | калибрующих | 36 | 130,040 | 130,063 | 59,720 | 59,720 | 60,010 | 60,025 | 64,820 | 64,820 | 65,010 | 65,025 | 69,780 | 69,780 |
| | | 37 | | | 59,820 | 59,820 | 60,030 | 60,046 | 64,890 | 64,890 | 65,030 | 65,046 | 69,880 | 69,880 |
| | | 38 | | | 59,890 | 59,890 | | | 64,940 | 64,940 | | | 69,940 | 69,940 |
| | | 39 | | | 59,940 | 59,940 | | | 64,970 | 64,970 | | | 69,970 | 69,970 |
| | | 40 | | | 59,970 | 59,970 | 60,030 | 60,046 | 64,990 | 65,000 | 65,030 | 65,046 | 69,990 | 70,000 |
| | | 41 | | | 59,990 | 60,000 | | | 65,010 | 65,025 | | | 70,010 | 70,025 |
| | | 42 | | | 60,010 | 60,025 | | | 65,030 | 65,046 | | | 70,030 | 70,046 |
| | | 43 | | | 60,030 | 60,046 | | | | | | | | |
| | | 44 | | | | | | | | | | | | |
| | | 45 | — | — | | | — | — | 65,030 | 65,046 | — | — | 70,030 | 70,046 |
| | | 46 | | | 60,030 | 60,046 | | | | | | | | |
| | | 47 | | | | | | | | | | | | |
| | | 48 | | | | | | | | | | | | |
| | | 49 | | | | | | | — | — | | | — | — |

*Продолжение табл. 8*

Размеры, мм

| Обозначение протяжки | | 2403-3721 | 2403-3722 | 2403-3724 | 2403-3725 | 2403-3727 | 2403-3728 | 2403-3731 | 2403-3732 | 2403-3734 | 2403-3735 | 2403-3737 | 2403-3738 |
|---|---|---|---|---|---|---|---|---|---|---|---|---|---|
| Сочетание полей допусков $D$ и $e$ | | H7—9H | H8—11H | H7—9H | H8—11H | H7—9H | H8—11H | H7—9H | H8—11H | H7—9H | H8—11H | H7—9H | H8—11H |
| $D \times m$ | | 70×4 | | 75×4 | | | | 80×4 | | | | 85×4 | |
| Номера и диаметры $D_i$ зубьев черновых и переходных | 1 | 62,980 | 62,980 | 68,040 | 68,040 | 68,040 | 68,040 | 73,080 | 73,080 | 73,080 | 73,080 | 78,020 | 78,020 |
| | 2 | 63,220 | 63,220 | 68,240 | 68,240 | 68,280 | 68,280 | 73,280 | 73,280 | 73,320 | 73,320 | 78,220 | 78 220 |
| | 3 | 63,460 | 63,460 | 68,440 | 68,440 | 68,520 | 68,520 | 73,480 | 73,480 | 73,560 | 73,560 | 78,420 | 78,420 |
| | 4 | 63,700 | 63,700 | 68,640 | 68,640 | 68,760 | 68,760 | 73,680 | 73,680 | 73,800 | 73,800 | 78,620 | 78,620 |
| | 5 | 63,940 | 63,940 | 68,840 | 68,840 | 69,000 | 69,000 | 73,880 | 73,880 | 74,040 | 74,040 | 78,820 | 78,820 |
| | 6 | 64,180 | 64,180 | 69,040 | 69,040 | 69,240 | 69,240 | 74,080 | 74,080 | 74,280 | 74,280 | 79,020 | 79,020 |
| | 7 | 64,420 | 64,420 | 69,240 | 69,240 | 69,480 | 69,480 | 74,280 | 74,280 | 74,520 | 74,520 | 79,220 | 79,220 |
| | 8 | 64,660 | 64,660 | 69,440 | 69,440 | 69,720 | 69,720 | 74,480 | 74,480 | 74,760 | 74,760 | 79,420 | 79,420 |
| | 9 | 64,900 | 64,900 | 69,640 | 69,640 | 69,960 | 69,960 | 74,680 | 74,680 | 75,000 | 75,000 | 79,620 | 79,620 |
| | 10 | 65,140 | 65,140 | 69,840 | 69,840 | 70,200 | 70,200 | 74,880 | 74,880 | 75,240 | 75,240 | 79,820 | 79,820 |
| | 11 | 65,380 | 65,380 | 70,040 | 70,040 | 70,440 | 70,440 | 75,080 | 75,080 | 75,480 | 75,480 | 80,020 | 80,020 |
| | 12 | 65,620 | 65,620 | 70,240 | 70,240 | 70,680 | 70,680 | 75,280 | 75,280 | 75,720 | 75,720 | 80,220 | 80,220 |
| | 13 | 65,860 | 65,860 | 70,440 | 70,440 | 70,920 | 70,920 | 75,480 | 75,480 | 75,960 | 75,960 | 80,420 | 80,420 |
| | 14 | 66,100 | 66,100 | 70,640 | 70,640 | 71,160 | 71,160 | 75,680 | 75,680 | 76,200 | 76,200 | 80,620 | 80 620 |
| | 15 | 66,340 | 66,340 | 70,840 | 70,840 | 71,400 | 71,400 | 75,880 | 75,880 | 76,440 | 76,440 | 80,820 | 80,820 |
| | 16 | 66,580 | 66,580 | 71,040 | 71,040 | 71,640 | 71,640 | 76,080 | 76,080 | 76,680 | 76,680 | 81,020 | 81,020 |
| | 17 | 66,820 | 66,820 | 71,240 | 71,240 | 71,880 | 71,880 | 76,280 | 76,280 | 76,920 | 76,920 | 81,220 | 81,220 |
| | 18 | 67,060 | 67,060 | 71,440 | 71,440 | 72,120 | 72,120 | 76,480 | 76,480 | 77,160 | 77,160 | 81,420 | 81,420 |
| | 19 | 67,300 | 67,300 | 71,640 | 71,640 | 72,360 | 72,360 | 76,680 | 76,680 | 77,400 | 77,400 | 81,620 | 81,620 |
| | 20 | 67,540 | 67,540 | 71,840 | 71,840 | 72,600 | 72,600 | 76,880 | 76,880 | 77,640 | 77,640 | 81,820 | 81,820 |
| | 21 | 67,780 | 67,780 | 72,040 | 72,040 | 72,840 | 72,840 | 77,080 | 77,080 | 77,880 | 77,880 | 82,020 | 82,020 |
| | 22 | 68,020 | 68,020 | 72,240 | 72,240 | 73,080 | 73,080 | 77,280 | 77,280 | 78,120 | 78,120 | 82,220 | 82,220 |
| | 23 | 68,260 | 68,260 | 72,440 | 72,440 | 73,320 | 73,320 | 77,480 | 77,480 | 78,360 | 78,360 | 82,420 | 82,420 |
| | 24 | 68 500 | 68,500 | 72,640 | 72,640 | 73,560 | 73,560 | 77,680 | 77,680 | 78,600 | 78,600 | 82,620 | 82,620 |
| | 25 | 68,740 | 68,740 | 72,840 | 72,840 | 73,800 | 73,800 | 77,880 | 77,880 | 78,840 | 78,840 | 82,820 | 82,820 |
| | 26 | 68,980 | 68,980 | 73,040 | 73,040 | 74,040 | 74,040 | 78,080 | 78,080 | 79,080 | 79,080 | 83,020 | 83,020 |

Размеры, мм

| Обозначение протяжки | | | 2403-3721 | 2403-3722 | 2403-3724 | 2403-3725 | 2403-3727 | 2403-3728 | 2403-3731 | 2403-3732 | 2403-3734 | 2403-3735 | 2403-3737 | 2403-3738 |
|---|---|---|---|---|---|---|---|---|---|---|---|---|---|---|
| Сочетание полей допусков $D$ и $e$ | | | H7—9H | H8—11H | H7—9H | H8—11H | H7—9H | H8—11H | H7—9H | H8—11H | H7—9H | H8—11H | H7—9H | H8—11H |
| $D \times m$ | | | 70×4 | | 75×4 | | | | 80×4 | | | | 85×4 | |
| Номера и диаметры $D_i$ зубьев | черновых и переходных | 27 | 69,220 | 69,220 | 73,240 | 73,240 | 74,280 | 74,280 | 78,280 | 78,280 | 79,320 | 79,320 | 83,220 | 83,220 |
| | | 28 | 69,460 | 69,460 | 73,440 | 73,440 | 74,520 | 74,520 | 78,480 | 78,480 | 79,560 | 79,560 | 83,420 | 83,420 |
| | | 29 | 69,580 | 69,580 | 73,640 | 73,640 | 74,640 | 74,640 | 78,680 | 78,680 | 79,680 | 79,680 | 83,620 | 83,620 |
| | | 30 | 69,700 | 69,700 | 73,840 | 73,840 | 74,760 | 74,760 | 78,880 | 78,880 | 79,800 | 79,800 | 83,820 | 83,820 |
| | | 31 | 69,820 | 69,820 | 74,040 | 74,040 | 74,880 | 74,880 | 79,080 | 79 080 | 79,880 | 79,880 | 84,020 | 84,020 |
| | | 32 | 69,890 | 69,890 | 74,240 | 74,240 | 74,940 | 74,940 | 79,280 | 79,280 | 79,940 | 79,940 | 84,220 | 84,220 |
| | | 33 | 69,940 | 69,940 | 74,440 | 74,440 | 74,970 | 74,970 | 79,480 | 79,480 | 79,970 | 79,970 | 84,420 | 84,420 |
| | чистовых | 34 | 69,970 | 69,970 | 74,540 | 74,540 | 74,990 | 75,000 | 79,580 | 79,580 | 79,990 | 80,000 | 84,520 | 84 520 |
| | | 35 | 69,990 | 70,000 | 74,640 | 74,640 | 75,010 | 75,025 | 79,680 | 79,680 | 80,010 | 80,025 | 84,620 | 84,620 |
| | | 36 | 70,010 | 70,025 | 74,740 | 74,740 | 75,030 | 75,046 | 79,780 | 79,780 | 80,030 | 80,046 | 84,720 | 84,720 |
| | | 37 | 70,030 | 70,046 | 74,820 | 74,820 | | | 79,880 | 79,880 | | | 84,820 | 84,820 |
| | калибрующих | 38 | | | 74,890 | 74,890 | | | 79,940 | 79,940 | | | 84,900 | 84,900 |
| | | 39 | | | 74,940 | 74,940 | 75,030 | 75,046 | 79,970 | 79,970 | 80,030 | 80,046 | 84,950 | 84,950 |
| | | 40 | | | 74,970 | 74,970 | | | 79,990 | 80,000 | | | 84,980 | 84,980 |
| | | 41 | 70,030 | 70,046 | 74,990 | 75,000 | | | 80,010 | 80,025 | | | 85,000 | 85,010 |
| | | 42 | | | 75,010 | 75,025 | | | 80,030 | 80,046 | | | 85,020 | 85,035 |
| | | 43 | | | 75,030 | 75,046 | | | | | | | 85,035 | 85,054 |
| | | 44 | | | | | | | | | | | | |
| | | 45 | | | | | | | | | | | | |
| | | 46 | — | — | 75,030 | 75,046 | — | — | 80,030 | 80,046 | — | — | 85,035 | 85,054 |
| | | 47 | | | | | | | | | | | | |
| | | 48 | | | | | | | | | | | | |
| | | 49 | | | | | | | — | — | | | | |

*Продолжение табл. 8*

Размеры, мм

| Обозначение протяжки | | 2403-3741 | 2403-3742 | 2403-3744 | 2403-3745 | 2403-3747 | 2403-3748 | 2403-3751 | 2403-3752 | 2403-3754 | 2403-3755 | 2403-3757 | 2403-3758 |
|---|---|---|---|---|---|---|---|---|---|---|---|---|---|
| Сочетание полей допусков $D$ и $e$ | | H7—9H | H8—11H | H7—9H | H8—11H | H7—9H | H8—11H | H7—9H | H8—11H | H7—9H | H8—11H | H7—9H | H8—11H |
| $D \times m$ | | 85×4 | | 90×4 | | | | 95×4 | | | | 100×4 | |
| Номера и диаметры $D_1$ зубьев черновых и переходных | 1 | 78,020 | 78,020 | 83,070 | 83,070 | 83,070 | 83,070 | 88,100 | 88,100 | 88,100 | 88,100 | 93,050 | 93,050 |
| | 2 | 78,260 | 78,260 | 83,270 | 83,270 | 83,310 | 83,310 | 88,300 | 88,300 | 88 340 | 88,340 | 93,250 | 93,250 |
| | 3 | 78,500 | 78,500 | 83,470 | 83,470 | 83,550 | 83,550 | 88,500 | 88,500 | 88,580 | 88,580 | 93,450 | 93,450 |
| | 4 | 78,740 | 78,740 | 83,670 | 83,670 | 83,790 | 83,790 | 88,700 | 88,700 | 88,820 | 88,820 | 93,650 | 93,650 |
| | 5 | 78,980 | 78,980 | 83,870 | 83,870 | 84,030 | 84,030 | 88,900 | 88,900 | 89,060 | 89,060 | 93,850 | 93,850 |
| | 6 | 79,220 | 79,220 | 84,070 | 84,070 | 84,270 | 84,270 | 89,100 | 89,100 | 89,300 | 89,300 | 94 050 | 94,050 |
| | 7 | 79,460 | 79,460 | 84,270 | 84,270 | 84,510 | 84,510 | 89,300 | 89,300 | 89,540 | 89,540 | 94,250 | 94,250 |
| | 8 | 79,700 | 79,700 | 84,470 | 84,470 | 84,750 | 84,750 | 89,500 | 89,500 | 89,780 | 89,780 | 94,450 | 94,450 |
| | 9 | 79,940 | 79,940 | 84,670 | 84,670 | 84,990 | 84,990 | 89,700 | 89,700 | 90,020 | 90,020 | 94,650 | 94,650 |
| | 10 | 80,180 | 80,180 | 84,870 | 84,870 | 85,230 | 85,230 | 89,900 | 89,900 | 90,260 | 90,260 | 94,850 | 94 850 |
| | 11 | 80,420 | 80,420 | 85,070 | 85,070 | 85,470 | 85,470 | 90,100 | 90,100 | 90,500 | 90,500 | 95,050 | 95,050 |
| | 12 | 80,660 | 80,660 | 85,270 | 85,270 | 85,710 | 85,710 | 90,300 | 90,300 | 90,740 | 90,740 | 95,250 | 95,250 |
| | 13 | 80,900 | 80,900 | 85,470 | 85,470 | 85,950 | 85,950 | 90,500 | 90,500 | 90,980 | 90,980 | 95,450 | 95,450 |
| | 14 | 81,140 | 81,140 | 85,670 | 85,670 | 86,190 | 86,190 | 90,700 | 90,700 | 91,220 | 91,220 | 95,650 | 95,650 |
| | 15 | 81,380 | 81,380 | 85,870 | 85,870 | 86,430 | 86,430 | 90,900 | 90,900 | 91,460 | 91,460 | 95,850 | 95,850 |
| | 16 | 81,620 | 81,620 | 86,070 | 86,070 | 86,670 | 86,670 | 91,100 | 91,100 | 91,700 | 91,700 | 96,050 | 96,050 |
| | 17 | 81,860 | 81,860 | 86,270 | 86,270 | 86,910 | 86,910 | 91,300 | 91,300 | 91,940 | 91,940 | 96,250 | 96,250 |
| | 18 | 82,100 | 82,100 | 86,470 | 86,470 | 87,150 | 87,150 | 91,500 | 91,500 | 92,180 | 92,180 | 96,450 | 96,450 |
| | 19 | 82,340 | 82,340 | 86,670 | 86,670 | 87,390 | 87,390 | 91,700 | 91,700 | 92,420 | 92,420 | 96,650 | 96,650 |
| | 20 | 82,580 | 82,580 | 86,870 | 86,870 | 87,630 | 87,630 | 91,900 | 91,900 | 92,660 | 92,660 | 96,850 | 96,850 |
| | 21 | 82,820 | 82,820 | 87,070 | 87,070 | 87,870 | 87,870 | 92,100 | 92,100 | 92,900 | 92,900 | 97,050 | 97,050 |
| | 22 | 83,060 | 83,060 | 87,270 | 87,270 | 88,110 | 88,110 | 92,300 | 92,300 | 93,140 | 93,140 | 97,250 | 97,250 |
| | 23 | 83,300 | 83,300 | 87,470 | 87,470 | 88,350 | 88,350 | 92,500 | 92,500 | 93,380 | 93,380 | 97,450 | 97,450 |
| | 24 | 83,540 | 83,540 | 87,670 | 87,670 | 88,590 | 88,590 | 92,700 | 92,700 | 93,620 | 93 620 | 97 650 | 97,650 |
| | 25 | 83,780 | 83,780 | 87,870 | 87,870 | 88,830 | 88,830 | 92,900 | 92,900 | 93,860 | 93,860 | 97,850 | 97,850 |
| | 26 | 84,020 | 84,020 | 88,070 | 88,070 | 89,070 | 89,070 | 93,100 | 93,100 | 94,100 | 94,100 | 98,050 | 98,050 |

Размеры, мм

| Обозначение протяжки | | | 2403-3741 | 2403-3742 | 2403-3744 | 2403-3745 | 2403-3747 | 2403-3748 | 2403-3751 | 2403-3752 | 2403-3754 | 2403-3755 | 2403-3757 | 2403-3758 |
|---|---|---|---|---|---|---|---|---|---|---|---|---|---|---|
| Сочетание полей допусков $D$ и $e$ | | | H7—9H | H8—11H | H7—9H | H8—11H | H7—9H | H8—11H | H7—9H | H8—11H | H7—9H | H8—11H | H7—9H | H8—11H |
| $D \times m$ | | | 85×4 | | 90×4 | | | | 95×4 | | | | 100×4 | |
| Номера и диаметры $D_i$ зубьев | черновых и переходных | 27 | 84,260 | 84,260 | 88,270 | 88,270 | 89,310 | 89,310 | 93,300 | 93,300 | 94,340 | 94,340 | 98,250 | 98,250 |
| | | 28 | 84,500 | 84,500 | 88,470 | 88,470 | 89,550 | 89,550 | 93,500 | 93,500 | 94,580 | 94 580 | 98,450 | 98,450 |
| | | 29 | 84,620 | 84,620 | 88,670 | 88,670 | 89,670 | 89,670 | 93,700 | 93,700 | 94 700 | 94,700 | 98 ,650 | 98,650 |
| | | 30 | 84,740 | 84,740 | 88,870 | 88,870 | 89,790 | 89,790 | 93,900 | 93,900 | 94,820 | 94,820 | 98,850 | 98,850 |
| | | 31 | 84,830 | 84,830 | 89,070 | 89,070 | 89,890 | 89,890 | 94,100 | 94,100 | 94,900 | 94,900 | 99,050 | 99,050 |
| | | 32 | 84,900 | 84,900 | 89,270 | 89,270 | 89,950 | 89,950 | 94,300 | 94,300 | 94,950 | 94 950 | 99,250 | 99,250 |
| | | 33 | 84,950 | 84,950 | 89,470 | 89,470 | 89,980 | 89,980 | 94,500 | 94,500 | 94,980 | 94,980 | 99,450 | 99,450 |
| | чистовых | 34 | 84,980 | 84,980 | 89,570 | 89,570 | 90,000 | 90,010 | 94,600 | 94,600 | 95,000 | 95,010 | 99,550 | 99,550 |
| | | 35 | 85,000 | 85,010 | 89,670 | 89,670 | 90,020 | 90,035 | 94,700 | 94,700 | 95,020 | 95,035 | 99,650 | 99,650 |
| | | 36 | 85,020 | 85,035 | 89,770 | 89,770 | 90,035 | 90,054 | 94,800 | 94,800 | 95 035 | 95,054 | 99,750 | 99,750 |
| | | 37 | 85,035 | 85,054 | 89,850 | 89,850 | | | 94,900 | 94,900 | | | 99,830 | 99,830 |
| | калибрующих | 38 | 85,035 | 85,054 | 89,910 | 89,910 | | | 94,950 | 94,950 | | | 99,900 | 99,900 |
| | | 39 | | | 89,950 | 89,950 | 90,035 | 90,054 | 94,980 | 94,980 | 95,035 | 95,054 | 99 950 | 99,950 |
| | | 40 | | | 89,980 | 89,980 | | | 95,000 | 95,010 | | | 99,980 | 99,980 |
| | | 41 | | | 90,000 | 90,010 | | | 95,020 | 95,035 | | | 100,000 | 100,010 |
| | | 42 | | | 90,020 | 90,035 | | | 95,035 | 95,054 | | | 100 020 | 100,035 |
| | | 43 | | | 90,035 | 90,054 | | | | | | | 100 035 | 100,054 |
| | | 44 | — | — | 90,035 | 90,054 | — | — | 95,035 | 95,054 | — | — | 100,035 | 100,054 |
| | | 45 | | | | | | | | | | | | |
| | | 46 | | | | | | | | | | | | |
| | | 47 | | | | | | | | | | | | |
| | | 48 | | | | | | | | | | | | |
| | | 49 | | | | | | | — | — | | | | |

*Продолжение табл 8*

Размеры, мм

| Номера и диаметры $D$, зубьев | | Обозначение протяжки | 2403-3761 | 2403-3762 | 2403-3764 | 2403-3765 | 2403-3767 | 2403-3768 | 2403-3771 | 2403-3772 | 2403-3774 | 2403-3775 | 2403-3777 | 2403-3778 |
|---|---|---|---|---|---|---|---|---|---|---|---|---|---|---|
| | | Сочетание полей допусков $D$ и $e$ | H7—9H | H8—11H | H7—9H | H8—11H | H7—9H | H8—11H | H7—9H | H8—11H | H7—9H | H8—11H | H7—9H | H8—11H |
| | | $D \times m$ | 100×4 | | 105×4 | | | | 110×4 | | | | 120×4 | |
| черновых и переходных | 1 | | 93,050 | 93,050 | 98,080 | 98,080 | 98,080 | 98,080 | 103,100 | 103,100 | 103,100 | 103,100 | 113,060 | 113,060 |
| | 2 | | 93,290 | 93,290 | 98,280 | 98,280 | 98,320 | 98,320 | 103,300 | 103,300 | 103,340 | 103,340 | 113,260 | 113,260 |
| | 3 | | 93,530 | 93,530 | 98,480 | 98,480 | 98,560 | 98,560 | 103,500 | 103,500 | 103,580 | 103,580 | 113,460 | 113,460 |
| | 4 | | 93,770 | 93,770 | 98,680 | 98,680 | 98,800 | 98,800 | 103,700 | 103,700 | 103,820 | 103,820 | 113,660 | 113,660 |
| | 5 | | 94,010 | 94,010 | 98,880 | 98,880 | 99,040 | 99,040 | 103,900 | 103,900 | 104,060 | 104,060 | 113,860 | 113,860 |
| | 6 | | 94,250 | 94,250 | 99,080 | 99,080 | 99,280 | 99,280 | 104,100 | 104,100 | 104,300 | 104,300 | 114,060 | 114,060 |
| | 7 | | 94,490 | 94,490 | 99,280 | 99,280 | 99,520 | 99,520 | 104,300 | 104,300 | 104,540 | 104,540 | 114,260 | 114,260 |
| | 8 | | 94,730 | 94,730 | 99,480 | 99,480 | 99,760 | 99,760 | 104,500 | 104,500 | 104,780 | 104,780 | 114,460 | 114,460 |
| | 9 | | 94,970 | 94,970 | 99,680 | 99,680 | 100,000 | 100,000 | 104,700 | 104 700 | 105,020 | 105,020 | 114,660 | 114,660 |
| | 10 | | 95,210 | 95,210 | 99,880 | 99,880 | 100,240 | 100,240 | 104,900 | 104,900 | 105,260 | 105,260 | 114,860 | 114 860 |
| | 11 | | 95,450 | 95,450 | 100,080 | 100,080 | 100,480 | 100,480 | 105,100 | 105 100 | 105,500 | 105,500 | 115,060 | 115,060 |
| | 12 | | 95,690 | 95,690 | 100,280 | 100,280 | 100,720 | 100,720 | 105,300 | 105,300 | 105,740 | 105,740 | 115,260 | 115,260 |
| | 13 | | 95,930 | 95,930 | 100,480 | 100,480 | 100,960 | 100,960 | 105,500 | 105,500 | 105,980 | 105,980 | 115,460 | 115,460 |
| | 14 | | 96,170 | 96,170 | 100,680 | 100,680 | 101,200 | 101,200 | 105,700 | 105,700 | 106,220 | 106,220 | 115,660 | 115,660 |
| | 15 | | 96,410 | 96,410 | 100,880 | 100,880 | 101,440 | 101,440 | 105,900 | 105,900 | 106,460 | 106,460 | 115,860 | 115,860 |
| | 16 | | 96,650 | 96,650 | 101,080 | 101,080 | 101,680 | 101,680 | 106,100 | 106,100 | 106,700 | 106,700 | 116,060 | 116 060 |
| | 17 | | 96,890 | 96,890 | 101,280 | 101,280 | 101,920 | 101,920 | 106,300 | 106,300 | 106,940 | 106,940 | 116,260 | 116,260 |
| | 18 | | 97,130 | 97,130 | 101,480 | 101,480 | 102,160 | 102,160 | 106,500 | 106,500 | 107,180 | 107,180 | 116,460 | 116,460 |
| | 19 | | 97,370 | 97,370 | 101,680 | 101,680 | 102,400 | 102,400 | 106,700 | 106,700 | 107,420 | 107,420 | 116,660 | 116,660 |
| | 20 | | 97,610 | 97,610 | 101,880 | 101,880 | 102,640 | 102,640 | 106,900 | 106,900 | 107,660 | 107,660 | 116,860 | 116 860 |
| | 21 | | 97,850 | 97,850 | 102,080 | 102,080 | 102,880 | 102,880 | 107,100 | 107,100 | 107,900 | 107,900 | 117,060 | 117 060 |
| | 22 | | 98,090 | 98,090 | 102,280 | 102,280 | 103,120 | 103,120 | 107,300 | 107,300 | 108,140 | 108,140 | 117,260 | 117,260 |
| | 23 | | 98,330 | 98,330 | 102,480 | 102,480 | 103,360 | 103,360 | 107,500 | 107,500 | 108,380 | 108 380 | 117,460 | 117,460 |
| | 24 | | 98,570 | 98,570 | 102,680 | 102,680 | 103,600 | 103,600 | 107,700 | 107,700 | 108,620 | 108,620 | 117,660 | 117,660 |
| | 25 | | 98,810 | 98,810 | 102 880 | 102,880 | 103,840 | 103,840 | 107,900 | 107,900 | 108,860 | 108 860 | 117,860 | 117,860 |
| | 26 | | 99,050 | 99,050 | 103,080 | 103,080 | 104,080 | 104,080 | 108,100 | 108,100 | 109,100 | 109,100 | 118,060 | 118,060 |

Размеры, мм

| Обозначение протяжки | | | 2403-3761 | 2403-3762 | 2403-3764 | 2403-3765 | 2403-3767 | 2403-3768 | 2403-3771 | 2403-3772 | 2403-3774 | 2403-3775 | 2403-3777 | 2403-3778 |
|---|---|---|---|---|---|---|---|---|---|---|---|---|---|---|
| Сочетание полей допусков $D$ и $e$ | | | H7—9H | H8—11H | H7—9H | H8—11H | H7—9H | H8—11H | H7—9H | H8—11H | H7—9H | H8—11H | H7—9H | H8—11H |
| $D \times m$ | | | 100×4 | | 105×4 | | | | 110×4 | | | | 120×4 | |
| Номера и диаметры $D_1$ зубьев | черновых и переходных | 27 | 99,290 | 99,290 | 103,280 | 103,280 | 104,320 | 104,320 | 108,300 | 108,300 | 109,340 | 109,340 | 118,260 | 118,260 |
| | | 28 | 99,530 | 99,530 | 103,480 | 103,480 | 104,560 | 104,560 | 108,500 | 108 500 | 109,580 | 109,580 | 118,460 | 118,460 |
| | | 29 | 99,650 | 99,650 | 103,680 | 103,680 | 104,680 | 104,680 | 108,700 | 108,700 | 109,700 | 109,700 | 118,660 | 118,660 |
| | | 30 | 99,770 | 99,770 | 103,880 | 103,880 | 104,800 | 104,800 | 108,900 | 108,900 | 109,820 | 109,820 | 118,860 | 118,860 |
| | | 31 | 99,890 | 99,890 | 104,080 | 104,080 | 104,890 | 104,890 | 109,100 | 109,100 | 109,900 | 109,900 | 119,060 | 119,060 |
| | | 32 | 99,950 | 99,950 | 104,280 | 104,280 | 104 950 | 104,950 | 109,300 | 109,300 | 109,950 | 109,950 | 119,260 | 119,260 |
| | чистовых | 33 | 99,980 | 99,980 | 104,480 | 104,480 | 104,980 | 104,980 | 109,500 | 109,500 | 109,980 | 109,980 | 119,460 | 119,460 |
| | | 34 | 100,000 | 100,010 | 104,580 | 104,580 | 105,000 | 105,010 | 109,600 | 109,600 | 110,000 | 110,010 | 119,560 | 119,560 |
| | | 35 | 100,020 | 100,035 | 104,680 | 104,680 | 105,020 | 105,035 | 109,700 | 109,700 | 110,020 | 110,035 | 119,660 | 119,660 |
| | | 36 | 100,035 | 100,054 | 104,780 | 104,780 | 105,035 | 105,054 | 109,800 | 109,800 | 110,035 | 110,054 | 119,760 | 119,760 |
| | калибрующих | 37 | 100,035 | 100,054 | 104,880 | 104,880 | 105,035 | 105,054 | 109,900 | 109,900 | 110,035 | 110,054 | 119 860 | 119,860 |
| | | 38 | | | 104 950 | 104 950 | | | 109,950 | 109,950 | | | 119 910 | 119 910 |
| | | 39 | | | 104,980 | 104,980 | | | 109,980 | 109,980 | | | 119,950 | 119,950 |
| | | 40 | | | 105,000 | 105,010 | | | 110,000 | 110,010 | | | 119,980 | 119,980 |
| | | 41 | | | 105,020 | 105,035 | | | 110,020 | 110,035 | | | 120 000 | 120,010 |
| | | 42 | | | 105,035 | 105,054 | | | 110,035 | 110,054 | | | 120,020 | 120,035 |
| | | 43 | — | — | 105 035 | 105,054 | — | — | 110,035 | 110,054 | — | — | 120,035 | 120,054 |
| | | 44 | | | | | | | | | | | | |
| | | 45 | | | | | | | | | | | | |
| | | 46 | | | | | | | | | | | | |
| | | 47 | | | | | | | | | | | 120,035 | 120,054 |
| | | 48 | | | | | | | | | | | | |
| | | 49 | | | — | — | | | — | — | | | | |

*Продолжение табл. 8*

Размеры, мм

| Обозначение протяжки | | 2403-3781 | 2403-3782 | 2403-3784 | 2403-3785 | 2403-3787 | 2403-3788 | 2403-3791 | 2403-3792 | 2403-3794 | 2403-3795 | 2403-3797 | 2403-3798 |
|---|---|---|---|---|---|---|---|---|---|---|---|---|---|
| Сочетание полей допусков $D$ и $e$ | | H7—9H | H8—11H | H7—9H | H8—11H | H7—9H | H8—11H | H7—9H | H8—11H | H7—9H | H8—11H | H7—9H | H8—11H |
| $D \times m$ | | 120×4 | | 130×4 | | | | 70×5 | | 75×5 | | 80×5 | |
| Номера и диаметры $D_i$ зубьев черновых и переходных | 1 | 113,060 | 113,060 | 123,140 | 123,140 | 123,140 | 123,140 | 61,110 | 61,110 | 66,200 | 66,200 | 71,270 | 71,270 |
| | 2 | 113,300 | 113,300 | 123,340 | 123,340 | 123,380 | 123,380 | 61,350 | 61,350 | 66,440 | 66,440 | 71,510 | 71,510 |
| | 3 | 113,540 | 113,540 | 123,540 | 123,540 | 123,620 | 123,620 | 61,590 | 61,590 | 66,680 | 66,680 | 71,750 | 71,750 |
| | 4 | 113,780 | 113,780 | 123,740 | 123,740 | 123,860 | 123,860 | 61,830 | 61,830 | 66,920 | 66,920 | 71,990 | 71,990 |
| | 5 | 114,020 | 114,020 | 123,940 | 123,940 | 124,100 | 124,100 | 62,070 | 62,070 | 67,160 | 67,160 | 72,230 | 72,230 |
| | 6 | 114,260 | 114,260 | 124,140 | 124,140 | 124,340 | 124,340 | 62,310 | 62,310 | 67,400 | 67,400 | 72,470 | 72,470 |
| | 7 | 114,500 | 114,500 | 124,340 | 124,340 | 124,580 | 124,580 | 62,550 | 62,550 | 67,640 | 67,640 | 72,710 | 72,710 |
| | 8 | 114,740 | 114,740 | 124,540 | 124,540 | 124,820 | 124,820 | 62,790 | 62,790 | 67,880 | 67,880 | 72,950 | 72,950 |
| | 9 | 114,980 | 114,980 | 124,740 | 124,740 | 125,060 | 125,060 | 63,030 | 63,030 | 68,120 | 68,120 | 73,190 | 73,190 |
| | 10 | 115,220 | 115,220 | 124,940 | 124,940 | 125,300 | 125,300 | 63,270 | 63,270 | 68,360 | 68,360 | 73,430 | 73,430 |
| | 11 | 115,460 | 115,460 | 125,140 | 125,140 | 125,540 | 125,540 | 63,510 | 63,510 | 68,600 | 68,600 | 73,670 | 73,670 |
| | 12 | 115,700 | 115,700 | 125,340 | 125,340 | 125,780 | 125,780 | 63,750 | 63,750 | 68,840 | 68,840 | 73,910 | 73,910 |
| | 13 | 115,940 | 115,940 | 125,540 | 125,540 | 126,020 | 126,020 | 63,990 | 63,990 | 69,080 | 69,080 | 74,150 | 74,150 |
| | 14 | 116,180 | 116,180 | 125,740 | 125,740 | 126,260 | 126,260 | 64,230 | 64,230 | 69,320 | 69,320 | 74,390 | 74,390 |
| | 15 | 116,420 | 116,420 | 125,940 | 125,940 | 126,500 | 126,500 | 64,470 | 64,470 | 69,560 | 69,560 | 74,630 | 74,630 |
| | 16 | 116,660 | 116,660 | 126,140 | 126,140 | 126,740 | 126,740 | 64,710 | 64,710 | 69,800 | 69,800 | 74,870 | 74,870 |
| | 17 | 116,900 | 116,900 | 126,340 | 126,340 | 126,980 | 126,980 | 64,950 | 64,950 | 70,040 | 70,040 | 75,110 | 75,110 |
| | 18 | 117,140 | 117,140 | 126,540 | 126,540 | 127,220 | 127,220 | 65,190 | 65,190 | 70,280 | 70,280 | 75,350 | 75,350 |
| | 19 | 117,380 | 117,380 | 126,740 | 126,740 | 127,460 | 127,460 | 65,430 | 65,430 | 70,520 | 70,520 | 75,590 | 75,590 |
| | 20 | 117,620 | 117,620 | 126,940 | 126,940 | 127,700 | 127,700 | 65,670 | 65,670 | 70,760 | 70,760 | 75,830 | 75,830 |
| | 21 | 117,860 | 117,860 | 127,140 | 127,140 | 127,940 | 127,940 | 65,910 | 65,910 | 71,000 | 71,000 | 76,070 | 76,070 |
| | 22 | 118,100 | 118,100 | 127,340 | 127,340 | 128,180 | 128,180 | 66,150 | 66,150 | 71,240 | 71,240 | 76,310 | 76,310 |
| | 23 | 118,340 | 118,340 | 127,540 | 127,540 | 128,420 | 128,420 | 66,390 | 66,390 | 71,480 | 71,480 | 76,550 | 76,550 |
| | 24 | 118,580 | 118,580 | 127,740 | 127,740 | 128,660 | 128,660 | 66,630 | 66,630 | 71,720 | 71,720 | 76,790 | 76,790 |
| | 25 | 118,820 | 118,820 | 127,940 | 127,940 | 128,900 | 128,900 | 66,870 | 66,870 | 71,960 | 71,960 | 77,030 | 77,030 |
| | 26 | 119,060 | 119,060 | 128,140 | 128,140 | 129,140 | 129,140 | 67,110 | 67,110 | 72,200 | 72,200 | 77,270 | 77,270 |

*Продолжение табл. 8*

Размеры, мм

| Обозначение протяжки | | | 2403-3781 | 2403-3782 | 2403-3784 | 2403-3785 | 2403-3787 | 2403-3788 | 2403-3791 | 2403-3792 | 2403-3794 | 2403-3795 | 2403-3797 | 2403-3798 |
|---|---|---|---|---|---|---|---|---|---|---|---|---|---|---|
| Сочетание полей допусков $D$ и $e$ | | | H7—9H | H8—11H | H7—9H | H8—11H | H7—9H | H8—11H | H7—9H | H8—11H | H7—9H | H8—11H | H7—9H | H8—11H |
| $D \times m$ | | | 120×4 | | 130×4 | | | | 70×5 | | 75×5 | | 80×5 | |
| Номера и диаметры $D_i$ зубьев | черновых и переходных | 27 | 119,300 | 119,300 | 128,340 | 128,340 | 129,380 | 129,380 | 67,350 | 67,350 | 72,440 | 72,440 | 77,510 | 77,510 |
| | | 28 | 119,540 | 119,540 | 128,540 | 128,540 | 129,620 | 129,620 | 67,590 | 67,590 | 72,680 | 72,680 | 77,750 | 77,750 |
| | | 29 | 119,660 | 119,660 | 128,740 | 128,740 | 129,740 | 129,740 | 67,830 | 67,830 | 72,920 | 72,920 | 77,990 | 77,990 |
| | | 30 | 119,780 | 119,780 | 128,940 | 128,940 | 129,840 | 129,840 | 68,070 | 68,070 | 73,160 | 73,160 | 78,230 | 78,230 |
| | | 31 | 119,890 | 119,890 | 129,140 | 129,140 | 129,920 | 129,920 | 68,310 | 68,310 | 73,400 | 73,400 | 78,470 | 78,470 |
| | | 32 | 119,950 | 119,950 | 129,340 | 129,340 | 129,960 | 129,960 | 68,550 | 68,550 | 73,640 | 73,640 | 78,710 | 78,710 |
| | чистовых | 33 | 119,980 | 119,980 | 129,540 | 129,540 | 129,980 | 129,990 | 68,790 | 68,790 | 73,880 | 73,880 | 78,950 | 78,950 |
| | | 34 | 120,000 | 120,010 | 129,640 | 129,640 | 130,000 | 130,020 | 69,030 | 69,030 | 74,120 | 74,120 | 79,190 | 79,190 |
| | | 35 | 120,020 | 120,035 | 129,740 | 129,740 | 130,020 | 130,045 | 69,270 | 69,270 | 74,360 | 74,360 | 79,430 | 79,430 |
| | | 36 | 120.035 | 120,054 | 129,840 | 129,840 | 130,040 | 130,063 | 69,510 | 69,510 | 74,480 | 74,480 | 79,550 | 79,550 |
| | калибрующих | 37 | 120,035 | 120,054 | 129,920 | 129,920 | 130,040 | 130,063 | 69,630 | 69,630 | 74,600 | 74,600 | 79,670 | 79,670 |
| | | 38 | | | 129,960 | 129,960 | | | 69,750 | 69,750 | 74,720 | 74,720 | 79,790 | 79,790 |
| | | 39 | | | 129,980 | 129,990 | | | 69,870 | 69,870 | 74,840 | 74,840 | 79,890 | 79,890 |
| | | 40 | | | 130,000 | 130,020 | | | 69,940 | 69,940 | 74,900 | 74,900 | 79,940 | 79,940 |
| | | 41 | | | 130,020 | 130,045 | | | 69,970 | 69,970 | 74,940 | 74,940 | 79,970 | 79,970 |
| | | 42 | | | 130,040 | 130,063 | | | 69,990 | 70,000 | 74,970 | 74,970 | 79,990 | 80,000 |
| | | 43 | | | 130,040 | 130,063 | | | 70,010 | 70,025 | 74,990 | 75,000 | 80,010 | 80,025 |
| | | 44 | | | | | | | 70,030 | 70,046 | 75,010 | 75,025 | 80,030 | 80,046 |
| | | 45 | | | | | | | | | 75,030 | 75,046 | | |
| | | 46 | | | | | | | | | | | | |
| | | 47 | — | — | | | — | — | 70,030 | 70,046 | | | 80,030 | 80,046 |
| | | 48 | | | | | | | | | 75,030 | 75,046 | | |
| | | 49 | | | | | | | | | | | | |
| | | 50 | | | — | — | | | | | | | | |
| | | 51 | | | | | | | — | — | | | — | — |

*Продолжение табл. 8*

Размеры, мм

| Обозначение протяжки | | 2403-3801 | 2403-3802 | 2403-3804 | 2403-3805 | 2403-3807 | 2403-3808 | 2403-3811 | 2403-3812 | 2403-3814 | 2403-3815 | 2403-3817 | 2403-3818 |
|---|---|---|---|---|---|---|---|---|---|---|---|---|---|
| Сочетание полей допусков *D* и *e* | | H7—9H | H8—11H | H7—9H | H8—11H | H7—9H | H8—11H | H7—9H | H8-11H | H7—9H | H8—11H | H7—9H | H8—11H |
| *D*×*m* | | 85×5 | | 90×5 | | 95×5 | | 100×5 | | 105×5 | | 110×5 | |
| Номера и диаметры $D_i$ зубьев черновых и переходных | 1 | 76,370 | 76,370 | 81,170 | 81,170 | 86,340 | 86,340 | 91,340 | 91,340 | 96,240 | 96,240 | 101,240 | 101,240 |
| | 2 | 76,610 | 76,610 | 81,410 | 81,410 | 86,580 | 86,580 | 91,580 | 91,580 | 96,480 | 96,480 | 101,480 | 101,480 |
| | 3 | 76,850 | 76,850 | 81,650 | 81,650 | 86,820 | 86,820 | 91,920 | 91,920 | 96,720 | 96,720 | 101,720 | 101,720 |
| | 4 | 77,090 | 77,090 | 81,890 | 81,890 | 87,060 | 87,060 | 92,060 | 92,060 | 96,960 | 96,960 | 101,960 | 101,960 |
| | 5 | 77,330 | 77,330 | 82,130 | 82,130 | 87,300 | 87,300 | 92,300 | 92,300 | 97,200 | 97,200 | 102,200 | 102,200 |
| | 6 | 77,570 | 77,570 | 82,370 | 82,370 | 87,540 | 87,540 | 92,540 | 92,540 | 97,440 | 97,440 | 102,440 | 102,440 |
| | 7 | 77,810 | 77,810 | 82,610 | 82,610 | 87,780 | 87,780 | 92,780 | 92,780 | 97,680 | 97,680 | 102,680 | 102,680 |
| | 8 | 78,050 | 78,050 | 82,850 | 82,850 | 88,020 | 88,020 | 93,020 | 93,020 | 97,920 | 97,920 | 102,920 | 102,920 |
| | 9 | 78,290 | 78,290 | 83,090 | 83,090 | 88,260 | 88,260 | 93,260 | 93,260 | 98,160 | 98,160 | 103,160 | 103,160 |
| | 10 | 78,530 | 78,530 | 83,330 | 83,330 | 88,500 | 88,500 | 93,500 | 93,500 | 98,400 | 98,400 | 103,400 | 103,400 |
| | 11 | 78,770 | 78,770 | 83,570 | 83,570 | 88,740 | 88,740 | 93,740 | 93,740 | 98,640 | 98,640 | 103,640 | 103,640 |
| | 12 | 79,010 | 79,010 | 83,810 | 83,810 | 88,980 | 88,980 | 93,980 | 93,980 | 98,880 | 98,880 | 103,880 | 103,880 |
| | 13 | 79,250 | 79,250 | 84,050 | 84,050 | 89,220 | 89,220 | 94,220 | 94,220 | 99,120 | 99,120 | 104,120 | 104,120 |
| | 14 | 79,490 | 79,490 | 84,290 | 84,290 | 89,460 | 89,460 | 94,460 | 94,460 | 99,360 | 99,360 | 104,360 | 104,360 |
| | 15 | 79,730 | 79,730 | 84,530 | 84,530 | 89,700 | 89,700 | 94,700 | 94,700 | 99,600 | 99,600 | 104,600 | 104,600 |
| | 16 | 79,970 | 79,970 | 84,770 | 84,770 | 89,940 | 89,940 | 94,940 | 94,940 | 99,840 | 99,840 | 104,840 | 104,840 |
| | 17 | 80,210 | 80,210 | 85,010 | 85,010 | 90,180 | 90,180 | 95,180 | 95,180 | 100,080 | 100,080 | 105,080 | 105,080 |
| | 18 | 80,450 | 80,450 | 85,250 | 85,250 | 90,420 | 90,420 | 95,420 | 95,420 | 100,320 | 100,320 | 105,320 | 105,320 |
| | 19 | 80,690 | 80,690 | 85,490 | 85,490 | 90,660 | 90,660 | 95,660 | 95,660 | 100,560 | 100,560 | 105,560 | 105,560 |
| | 20 | 80,930 | 80,930 | 85,730 | 85,730 | 90,900 | 90,900 | 95,900 | 95,900 | 100,800 | 100,800 | 105,800 | 105,800 |
| | 21 | 81,170 | 81,170 | 85,970 | 85,970 | 91,140 | 91,140 | 96,140 | 96,140 | 101,040 | 101,040 | 106,040 | 106,040 |
| | 22 | 81,410 | 81,410 | 86,210 | 86,210 | 91,380 | 91,380 | 96,380 | 96,380 | 101,280 | 101,280 | 106,280 | 106,280 |
| | 23 | 81,650 | 81,650 | 86,450 | 86,450 | 91,620 | 91,620 | 96,620 | 96,620 | 101,520 | 101,520 | 106,520 | 106,520 |
| | 24 | 81,890 | 81,890 | 86,690 | 86,690 | 91,860 | 91,860 | 96,860 | 96,860 | 101,760 | 101,760 | 106,760 | 106,760 |
| | 25 | 82,130 | 82,130 | 86,930 | 86,930 | 92,100 | 92,100 | 97,100 | 97,100 | 102,000 | 102,000 | 107,000 | 107,000 |
| | 26 | 82,370 | 82,370 | 87,170 | 87,170 | 92,340 | 92,340 | 97,340 | 97,340 | 102,240 | 102,240 | 107,240 | 107,240 |

*Продолжение табл. 8*

Размеры, мм

| Обозначение протяжки | | | 2403-3801 | 2403-3802 | 2403-3804 | 2403-3805 | 2403-3807 | 2403-3808 | 2403-3811 | 2403-3812 | 2403-3814 | 2403-3815 | 2403-3817 | 2403-3818 |
|---|---|---|---|---|---|---|---|---|---|---|---|---|---|---|
| Сочетание полей допусков $D$ и $e$ | | | H7—9H | H8—11H | H7—9H | H8—11H | H7—9H | H8—11H | H7—9H | H8—11H | H7—9H | H8—11H | H7—9H | H8—11H |
| $D \times m$ | | | 85×5 | | 90×5 | | 95×5 | | 100×5 | | 105×5 | | 110×5 | |
| Номера и диаметры $D_i$ зубьев | черновых и переходных | 27 | 82,610 | 82,610 | 87,410 | 87,410 | 92,580 | 92,580 | 97,580 | 97,580 | 102,480 | 102,480 | 107,480 | 107,480 |
| | | 28 | 82,850 | 82,850 | 87,650 | 87,650 | 92,820 | 92,820 | 97,820 | 97,820 | 102,720 | 102,720 | 107,720 | 107,720 |
| | | 29 | 83,090 | 83,090 | 87,890 | 87,890 | 93,060 | 93,060 | 98,060 | 98,060 | 102,960 | 102,960 | 107,960 | 107,960 |
| | | 30 | 83,330 | 83,330 | 88,130 | 88,130 | 93,300 | 93,300 | 98,300 | 98,300 | 103,200 | 103,200 | 108,200 | 108,200 |
| | | 31 | 83,570 | 83,570 | 88,370 | 88,370 | 93,540 | 93,540 | 98,540 | 98,540 | 103,440 | 103,440 | 108,440 | 108,440 |
| | | 32 | 83,810 | 83,810 | 88,610 | 88,610 | 93,780 | 93,780 | 98,780 | 98,780 | 103,680 | 103,680 | 108,680 | 108,680 |
| | | 33 | 84,050 | 84,050 | 88,850 | 88,850 | 94,020 | 94,020 | 99,020 | 99,020 | 103,920 | 103,920 | 108,920 | 108,920 |
| | | 34 | 84,290 | 84,290 | 89,090 | 89,090 | 94,260 | 94,260 | 99,260 | 99,260 | 104,160 | 104,160 | 109,160 | 109,160 |
| | | 35 | 84,530 | 84,530 | 89,330 | 89,330 | 94,500 | 94,500 | 99,500 | 99,500 | 104,400 | 104,400 | 109,400 | 109,400 |
| | | 36 | 84,650 | 84,650 | 89,570 | 89,570 | 94,620 | 94,620 | 99,620 | 99,620 | 104,520 | 104,520 | 109,520 | 109,520 |
| | | 37 | 84,770 | 84,770 | 89,690 | 89,690 | 94,740 | 94,740 | 99,740 | 99,740 | 104,640 | 104,640 | 109,640 | 109,640 |
| | | 38 | 84,890 | 84,890 | 89,810 | 89,810 | 94,830 | 94,830 | 99,830 | 99,830 | 104,760 | 104,760 | 109,760 | 109,760 |
| | | 39 | 84,950 | 84,950 | 89,900 | 89,900 | 94,900 | 94,900 | 99,900 | 99,900 | 104,840 | 104,840 | 109,840 | 109,840 |
| | чистовых | 40 | 84,980 | 84,980 | 89,950 | 89,950 | 94,950 | 94,950 | 99,950 | 99,950 | 104,900 | 104,900 | 109,900 | 109,900 |
| | | 41 | 85,000 | 85,010 | 89,980 | 89,980 | 94,980 | 94,980 | 99,980 | 99,980 | 104,950 | 104,950 | 109,950 | 109,950 |
| | | 42 | 85,020 | 85,035 | 90,000 | 90,010 | 95,000 | 95,010 | 100,000 | 100,010 | 104,980 | 104,980 | 109,980 | 109,980 |
| | | 43 | 85,035 | 85,054 | 90,020 | 90,035 | 95,020 | 95,035 | 100,020 | 100,035 | 105,000 | 105,010 | 110,000 | 110,010 |
| | калибрующих | 44 | 85,035 | 85,054 | 90,035 | 90,054 | 95,035 | 95,054 | 100,035 | 100,054 | 105,020 | 105,035 | 110,020 | 110,035 |
| | | 45 | | | | | | | | | 105,035 | 105,054 | 110,035 | 110,054 |
| | | 46 | | | | | | | | | | | | |
| | | 47 | | | 90,035 | 90,054 | 95,035 | 95,054 | 100,035 | 100,054 | | | | |
| | | 48 | | | | | | | | | 105,035 | 105,054 | 110,035 | 110,054 |
| | | 49 | | | | | | | | | | | | |
| | | 50 | — | — | | | | | | | | | | |
| | | 51 | | | — | — | — | — | — | — | | | | |

*Продолжение табл. 8*

Размеры, мм

| Обозначение протяжки | | | 2403-3821 | 2403-3822 | 2403-3824 | 2403-3825 |
|---|---|---|---|---|---|---|
| Сочетание полей допусков $D$ и $e$ | | | H7—9H | H8—11H | H7—9H | H8—11H |
| $D \times m$ | | | 120×5 | | 130×5 | |
| Номера и диаметры $D_i$ зубьев | черновых и переходных | 1 | 111,340 | 111,340 | 121,240 | 121,240 |
| | | 2 | 111,580 | 111,580 | 121,480 | 121,480 |
| | | 3 | 111,820 | 111,820 | 121,720 | 121,720 |
| | | 4 | 112,060 | 112,060 | 121,960 | 121,960 |
| | | 5 | 112,300 | 112,300 | 122,200 | 122,200 |
| | | 6 | 112,540 | 112,540 | 122,440 | 122,440 |
| | | 7 | 112,780 | 112,780 | 122,680 | 122,680 |
| | | 8 | 113,020 | 113,020 | 122,920 | 122,920 |
| | | 9 | 113,260 | 113,260 | 123,160 | 123,160 |
| | | 10 | 113,500 | 113,500 | 123,400 | 123,400 |
| | | 11 | 113,740 | 113,740 | 123,640 | 123,640 |
| | | 12 | 113,980 | 113,980 | 123,880 | 123 880 |
| | | 13 | 114,220 | 114,220 | 124,120 | 124,120 |
| | | 14 | 114,460 | 114,460 | 124,360 | 124,360 |
| | | 15 | 114,700 | 114,700 | 124,600 | 124,600 |
| | | 16 | 114,940 | 114,940 | 124,840 | 124,840 |
| | | 17 | 115,180 | 115,180 | 125,080 | 125,080 |
| | | 18 | 115,420 | 115,420 | 125,320 | 125,320 |
| | | 19 | 115,660 | 115,660 | 125,560 | 125,560 |
| | | 20 | 115,900 | 115,900 | 125,800 | 125,800 |
| | | 21 | 116,140 | 116,140 | 126,040 | 126,040 |
| | | 22 | 116,380 | 116,380 | 126,280 | 126,280 |
| | | 23 | 116,620 | 116,620 | 126,520 | 126,520 |
| | | 24 | 116,860 | 116,860 | 126,760 | 126,760 |
| | | 25 | 117,100 | 117,100 | 127,000 | 127,000 |
| | | 26 | 117,340 | 117,340 | 127,240 | 127,240 |

*Продолжение табл. 8*

Размеры, мм

| Обозначение протяжки | | | 2403-3821 | 2403-3822 | 2403-3824 | 2403-3825 |
|---|---|---|---|---|---|---|
| Сочетание полей допусков $D$ и $e$ | | | H7—9H | H8—11H | H7—9H | H8—11H |
| $D \times m$ | | | 120×5 | | 130×5 | |
| Номера и диаметры $D_i$ зубьев | черновых и переходных | 27 | 117,580 | 117,580 | 127,480 | 127,480 |
| | | 28 | 117,820 | 117,820 | 127,720 | 127,720 |
| | | 29 | 118,060 | 118,060 | 127,960 | 127,960 |
| | | 30 | 118,300 | 118,300 | 128,200 | 128,200 |
| | | 31 | 118,540 | 118,540 | 128,440 | 128,440 |
| | | 32 | 118,780 | 118,780 | 128,680 | 128,680 |
| | | 33 | 119,020 | 119,020 | 128,920 | 128,920 |
| | | 34 | 119,260 | 119,260 | 129,160 | 129,160 |
| | | 35 | 119,500 | 119,500 | 129,400 | 129,400 |
| | | 36 | 119,620 | 119,620 | 129,520 | 129,520 |
| | | 37 | 119,740 | 119,740 | 129,640 | 129,640 |
| | | 38 | 119,830 | 119,830 | 129,760 | 129,760 |
| | | 39 | 119,900 | 119,900 | 129,850 | 129,850 |
| | | 40 | 119,950 | 119,950 | 129,920 | 129,920 |
| | чистовых | 41 | 119,980 | 119,980 | 129,960 | 129,960 |
| | | 42 | 120,000 | 120,010 | 129,980 | 129,990 |
| | | 43 | 120,020 | 120,035 | 130,000 | 130,020 |
| | | 44 | 120,035 | 120,054 | 130,020 | 130,045 |
| | калибрующих | 45 | 120,035 | 120,054 | 130,040 | 130,063 |
| | | 46 | | | | |
| | | 47 | | | | |
| | | 48 | | | | |
| | | 49 | | | | |
| | | 50 | | | | |
| | | 51 | — | — | | |

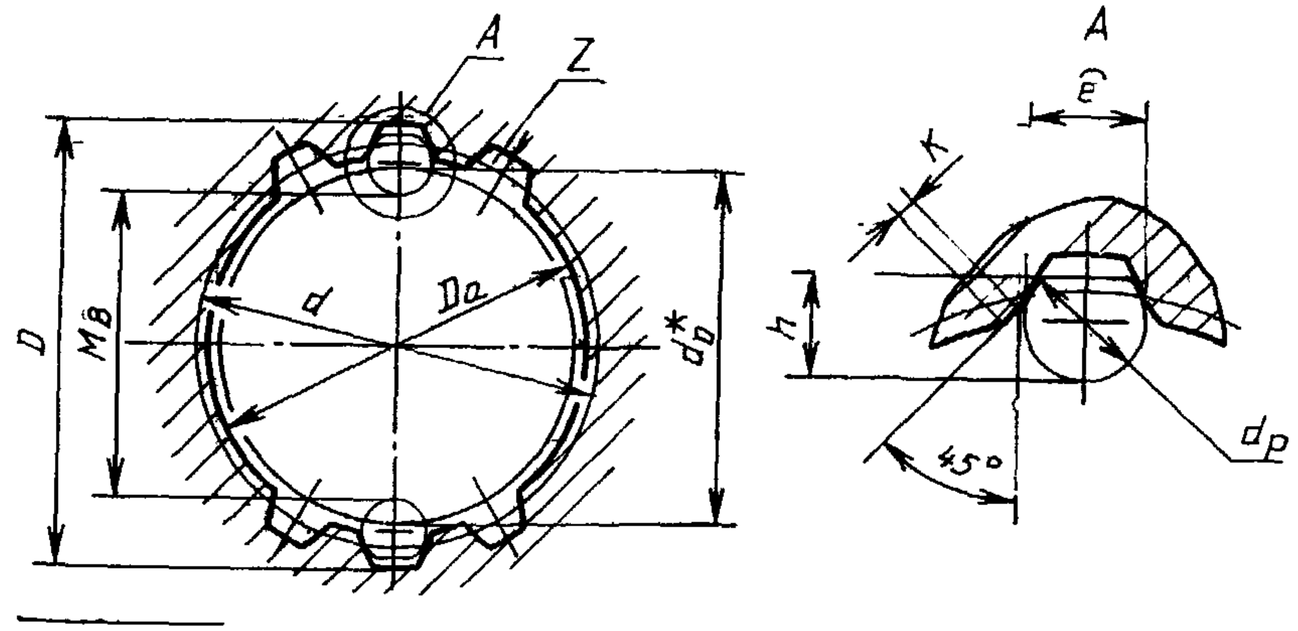


* Диаметр отверстия до протягивания, для справок.

Черт. 3

Таблица 9

Размеры, мм

| Обозначение протяжки | $D \times m$ | $z$ | Номер прохода | Сочетание полей допусков $D$ и $e$ | $d$ | $e$ | $D_a$ (поле допуска H11) | $K$ | $d_0$ (поле допуска H11) | $d_p$ | $h$ | $M_B$ Наим. | $M_B$ Верхн откл | Длина протягивания: Сталь и алюминиевые сплавы | Длина протягивания: Чугун, бронза, латунь | Усилие протягивания $P$, $H$ (кгс), при переднем угле: 20 | 15° | 10° |
|---|---|---|---|---|---|---|---|---|---|---|---|---|---|---|---|---|---|---|
| 2403-3569 | 70×3 | 22 | 1 | — | 66,0 | 5,117 | 64 | 0,45 | 63,4 | — | — | — | — | 45—124 | 45—150 | 244250 (24900) | 267220 (27240) | 287250 (29280) |
| 2403-3571 | | | 2 | H7—9H | | | | | | 5,454 | 5,2 | 58,445 | +0,097 | | | | | |
| 2403-3572 | | | | H8—11H | | | | | | | | 58,503 | +0,192 | | | | | |
| 2403-3573 | 75×3 | 24 | 1 | — | 72,0 | 4,539 | 69 | | 68,4 | — | — | — | — | | | 266100 (27130) | 291150 (29680) | 313000 (31910) |
| 2403-3574 | | | 2 | H7—9H | | | | | | 5,454 | 5,2 | 63,311 | +0,102 | | | | | |
| 2403-3575 | | | | H8—11H | | | | | | | | 63,373 | +0,203 | | | | | |
| 2403-3576; 2403-3579 | 80×3 | 25 | 1 | — | 75,0 | 5,694 | 74 | | 73,4 | — | — | — | — | 45—140 | 45—170 | 306950 (31300) | 335850 (34240) | 361050 (36810) |
| 2403-3577; 2403-3581 | | | 2 | H7—9H | | | | | | 5,454 | 5,2 | 68,385 | +0,090 | | | | | |
| 2403-3578; 2403-3582 | | | | H8—11H | | | | | | | | 68,439 | +0,179 | | | | | |
| 2403-3583; 2403-3586 | 85×3 | 27 | 1 | — | 81,0 | 5,117 | 79 | | 78,4 | — | — | — | — | | | 322500 (32880) | 352850 (35970) | 379300 (38670) |
| 2403-3584; 2403-3587 | | | 2 | H7—9H | | | | | | 5,454 | 5,2 | 73,335 | +0,094 | | | | | |
| 2403-3585; 2403-3588 | | | | H8—11H | | | | | | | | 73,391 | +0,188 | | | | | |

*Продолжение табл 9*

Размеры, мм

| Обозначение протяжки | $D \times m$ | $z$ | Номер прохода | Сочетание полей допусков $D$ и $e$ | $d$ | $e$ | $D_a$ (поле допуска H11) | $K$ | $d_0$ (поле допуска H11) | $d_p$ | $h$ | $M_B$ Наим | $M_B$ Верхн. откл. | Длина протягивания: Сталь и алюминиевые сплавы | Длина протягивания: Чугун, бронза, латунь | Усилие протягивания $P$, Н (кгс), при переднем угле: 20° | 15 | 10 |
|---|---|---|---|---|---|---|---|---|---|---|---|---|---|---|---|---|---|---|
| 2403-3589; 2403-3593 | 90×3 | 28 | 1 | — | 84,0 | 6,271 | 84 | 0,45 | 83,4 | — | — | — | — | 45—140 | 45—170 | 349650 (35650) | 382550 (39000) | 411250 (41930) |
| 2403-3591; 2403-3594 | | | 2 | H7—9H | | | | | | 5,454 | 5,2 | 78,552 | +0,086 | | | | | |
| 2403-3592; 2403-3595 | | | | H8—11H | | | | | | | | 78,604 | +0,172 | | | | | |
| 2403-3596; 2403-3599 | 95×3 | 30 | 1 | — | 90,0 | 5,694 | 89 | | 88,4 | — | | — | — | | | 366100 (37320) | 400525 (40830) | 430550 (43900) |
| 2403-3597; 2403-3601 | | | 2 | H7—9H | | | | | | 5,454 | | 83,535 | +0,089 | | | | | |
| 2403-3598; 2403-3602 | | | | H8—11H | | | | | | | | 83,588 | +0,179 | | | | | |
| 2403-3603; 2403-3606 | 100×3 | 32 | 1 | — | 96,0 | 5,117 | 94 | | 93,4 | — | — | — | — | | | 362050 (36910) | 396100 (40380) | 425800 43410) |
| 2403-3604; 2403-3607 | | | 2 | H7—9H | | | | | | 5,454 | | 88,483 | +0,093 | | | | | |
| 2403-3605; 2403-3608 | | | | H8—11H | | | | | | | | 88,539 | +0,185 | | | | | |
| 2403-3609; 2403-3613 | 105×3 | 34 | 1 | — | 102,0 | 4,539 | 99 | | 98,4 | — | | — | — | | | 376300 (38360) | 411700 (41970) | 442575 (45120) |
| 2403-3611; 2403-3614 | | | 2 | H7—9H | | | | | | 5,454 | | 93,403 | +0,108 | | | | | |
| 2403-3612; 2403-3615 | | | | H8—11H | | | | | | | | 93,469 | +0,215 | | | | | |
| 2403-3616 | 110×3 | 35 | 1 | — | 105,0 | 5,694 | 104 | | 103,4 | — | | — | — | 45—124 | 45—150 | 391000 (39860) | 427800 (43610) | 459900 (46880) |
| 2403-3617 | | | 2 | H7—9H | | | | | | 5,454 | 5,2 | 98,440 | +0,099 | | | | | |
| 2403-3618 | | | | H8—11H | | | | | | | | 98,500 | +0,199 | | | | | |
| 2403-3619 | 120×3 | 38 | 1 | — | 114,0 | 6,271 | 114 | | 113,4 | — | | — | — | | | 394300 (40200) | 431400 (43980) | 463750 (47280) |
| 2403-3621 | | | 2 | H7—9H | | | | | | 6,212 | — | 106,253 | +0,101 | | | | | |
| 2403-3622 | | | | H8—11H | | | | | | | | 106,314 | +0,202 | | | | | |
| 2403-3623 | 130×3 | 42 | 1 | — | 126,0 | 5,117 | 124 | | 123,4 | — | | — | — | | | 383650 (39110) | 419750 (42790) | 451250 (46000) |
| 2403-3624 | | | 2 | H7—9H | | | | | | 5,454 | 5,2 | 118,509 | +0,102 | | | | | |
| 2403-3625 | | | | H8—11H | | | | | | | | 118,571 | +0,203 | | | | | |
| 2403-3626; 2403-3629 | 55×3,5 | 14 | 1 | — | 49,0 | 6,739 | 48 | 0,52 | 47,5 | — | | — | — | 40—110 | 40—130 | 154650 (15770) | 169220 (17250) | 181900 (18540) |
| 2403-3627; 2403-3631 | | | 2 | H7—9H | | | | | | 6,518 | — | 41,101 | +0,086 | | | | | |
| 2403-3628; 2403-3632 | | | | H8—11H | | | | | | | | 41,147 | +0,170 | | | | | |
| 2403-3633; 2403-3636 | 60×3,5 | 16 | 1 | — | 56,0 | 5,584 | 53 | | 52,4 | — | | — | — | | | 186750 (19040) | 204325 (20830) | 219650 (22390) |
| 2403-3634; 2403-3637 | | | 2 | H7—9H | | | | | | 6,212 | 5,8 | 46,823 | +0,106 | | | | | |
| 2403-3635; 2403-3638 | | | | H8—11H | | | | | | | | 46,887 | +0,210 | | | | | |
| 2403-3639; 2403-3643 | 64×3,5 | 18 | 1 | — | 63,0 | 4,430 | 58 | | 57,4 | — | | — | — | | | 184500 (18810) | 201850 (20580) | 217000 (22120) |
| 2403-3641; 2403-3644 | | | 2 | H7—9H | | | | | | 6,212 | — | 51,143 | +0,138 | | | | | |
| 2403-3642; 2403-3645 | | | | H8—11H | | | | | | | | 51,226 | +0,271 | | | | | |

Размеры, мм

| Обозначение протяжки | $D \times m$ | $z$ | Номер прохода | Сочетание полей допусков $D$ и $e$ | $d$ | $e$ | $D_a$ (поле допуска H11) | $K$ | $d_0$ (поле допуска H11) | $d_p$ | $h$ | $M_B$ Наим | $M_B$ Верхн откл. | Длина протягивания: Сталь и алюминиевые сплавы | Длина протягивания: Чугун, бронза, латунь | Усилие протягивания $P$, Н (кгс), при переднем угле: 20 | 15° | 10° |
|---|---|---|---|---|---|---|---|---|---|---|---|---|---|---|---|---|---|---|
| 2403-3646; 2403-3649 | 70×3,5 | 18 | 1 | — | 63,0 | 7,316 | 63 | | 62,4 | — | — | — | — | 40—110 | 40—130 | 192750 (19650) | 210900 (21500) | 226700 (23110) |
| 2403-3647; 2403-3651 | | | 2 | H7—9H | | | | | | 6,518 | | 56,167 | +0,088 | | | | | |
| 2403-3648; 2403-3652 | | | | H8—11H | | | | | | | | 56,220 | +0,174 | | | | | |
| 2403-3653; 2403-3656 | 75×3,5 | 20 | 1 | — | 70,0 | 6,162 | 68 | | 67,4 | — | 5,8 | — | — | 45—116 | 45—140 | 250700 (25550) | 274275 (27960) | 294850 (30060) |
| 2403-3654; 2403-3657 | | | 2 | H7—9H | | | | | | 6,212 | | 62,018 | +0,094 | | | | | |
| 2403-3655; 2403-3658 | | | | H8—11H | | | | | | | | 62,074 | +0,188 | | | | | |
| 2403-3659; 2403-3663 | 80×3,5 | 22 | 1 | — | 77,0 | 5,007 | 73 | | 72,4 | — | | — | — | | | 260925 (26600) | 285475 (29100) | 306900 (31280) |
| 2403-3661; 2403-3664 | | | 2 | H7—9H | | | | | | 6,212 | 5,8 | 66,727 | +0,107 | | | | | |
| 2403-3662; 2403-3665 | | | | H8—11H | | | | | | | | 66,791 | +0,211 | | | | | |
| 2403 3666 2403-3669 | 85×3,5 | 24 | 1 | — | 84,0 | 3,852 | 78 | | 77,4 | — | | — | — | | | 290200 (29590) | 317500 (32370) | 341300 (34800) |
| 2403-3667; 2403-3671 | | | 2 | H7—9H | | | | | | 5,454 | 5,2 | 73,932 | +0,108 | | | | | |
| 2403-3668; 2403-3672 | | | | H8—11H | | | | | | | | 73,997 | +0,213 | | | | | |
| 2403-3673; 2403-3676 | 90×3,5 | | 1 | — | | 6,739 | 83 | 0,52 | 82,4 | — | | — | — | | | 319200 (32540) | 349225 (35600) | 375400 (38270) |
| 2403-3674; 2403-3677 | | | 2 | H7—9H | | | | | | 6,212 | 5,8 | 77,079 | +0,089 | | | | | |
| 2403-3675; 2403-3678 | | | | H8—11H | | | | | | | | 77,132 | +0,177 | | | | | |
| 2403-3679; 2403-3683 | 95×3,5 | 26 | 1 | — | 91,0 | 5,584 | 88 | | 87,4 | — | — | — | — | 45—124 | 45—150 | 332000 (33850) | 363250 (37030) | 390500 (39810) |
| 2403-3681; 2403-3684 | | | 2 | H7—9H | | | | | | 6,212 | | 81,945 | +0,097 | | | | | |
| 2403-3682; 2403-3685 | | | | H8—11H | | | | | | | | 82,003 | +0,192 | | | | | |
| 2403-3686 | 100×3,5 | 28 | 1 | — | 98,0 | 4,430 | 93 | | 92,4 | — | | — | — | | | 350850 (35760) | 383850 (39130) | 412650 (42070) |
| 2403-3687 | | | 2 | H7—9H | | | | | | 6,212 | | 86,631 | +0,107 | | | | | |
| 2403-3688 | | | | H8—11H | | | | | | | | 86,695 | +0,212 | | | | | |
| 2403-3689 | 105×3,5 | 29 | 1 | — | 101,5 | 5,296 | 98 | | 97,4 | — | | — | — | | | 372000 (37920) | 407000 (41490) | 437525 (44600) |
| 2403-3691 | | | 2 | H7—9H | | | | | | 6,212 | | 91,771 | +0,109 | | | | | |
| 2403-3692 | | | | H8—11H | | | | | | | | 91,837 | +0,217 | | | | | |
| 2403-3693 | 110×3,5 | 30 | 1 | — | 105,0 | 6,162 | 103 | | 102,4 | — | | — | — | | | 390100 (39770) | 426800 (43510) | 458800 (46770) |
| 2403-3694 | | | 2 | H7—9H | | | | | | 6,518 | | 96,092 | +0,105 | | | | | |
| 2403-3695 | | | | H8—11H | | | | | | | | 96,156 | +0,208 | | | | | |
| 2403-3696 | 120×3,5 | 34 | 1 | — | 119,0 | 3,852 | 113 | | 112,4 | — | | — | — | | | 399500 (40730) | 437100 (44560) | 469875 (47900) |
| 2403-3697 | | | 2 | H7—9H | | | | | | 6,212 | | 106,542 | +0,119 | | | | | |
| 2403-3698 | | | | H8—11H | | | | | | | | 106,614 | +0,237 | | | | | |

*Продолжение табл. 9*

Размеры, мм

| Обозначение протяжки | $D \times m$ | $z$ | Номер прохода | Сочетание полей допусков $D$ и $e$ | $d$ | $e$ | $D_a$ (поле допуска H11) | $K$ | $d_0$ (поле допуска H11) | $d_p$ | $h$ | $M_B$ | | Длина протягивания | | Усилие протягивания $P$, Н (кгс), при переднем угле | | |
|---|---|---|---|---|---|---|---|---|---|---|---|---|---|---|---|---|---|---|
| | | | | | | | | | | | | Наим. | Верхн. откл. | Сталь и алюминиевые сплавы | Чугун, бронза, латунь | 20° | 15° | 10° |
| 2403-3699 | 130×3,5 | 36 | 1 | — | 126,0 | 5,584 | 123 | 0,52 | 122,4 | — | — | — | — | 40—110 | 40—130 | 380600 (38800) | 416425 (42450) | 447650 (45650) |
| 2403-3701 | | | 2 | H7—9H | | | | | | 6,212 | 5,8 | 116,997 | +0,105 | | | | | |
| 2403-3702 | | | | H8—11H | | | | | | | | 117,061 | +0,208 | | | | | |
| 2403-3703 | 60×4 | 13 | 1 | — | 52,0 | 8,362 | 52 | | 51,4 | — | | — | — | 36—82 | 36—100 | 163900 (16710) | 179300 (18280) | 192750 (19650) |
| 2403-3704 | | | 2 | H7—9H | | | | | | 7,000 | | 45,144 | +0,084 | | | | | |
| 2403-3705 | | | | H8—11H | | | | | | | | 45,195 | +0,165 | | | | | |
| 2403-3706 | | | 1 | — | | | | | | — | | — | — | 40—110 | 40—130 | 189900 (19360) | 207775 (21180) | 223350 (22770) |
| 2403-3707 | | | 2 | H7—9H | | | | | | 7,000 | | 45,144 | +0,084 | | | | | |
| 2403-3708 | | | | H8—11H | | | | | | | | 45,195 | +0,165 | | | | | |
| 2403-3709 | 65×4 | 15 | 1 | — | 60,0 | 6,630 | 57 | 0,60 | 56,4 | — | — | — | — | 36—82 | 36—100 | 174350 (17780) | 190750 (19450) | 205050 (20910) |
| 2403-3711 | | | 2 | H7—9H | | | | | | 7,000 | | 50,026 | +0,102 | | | | | |
| 2403-3712 | | | | H8—11H | | | | | | | | 50,087 | +0,202 | | | | | |
| 2403-3713 | | | 1 | — | | | | | | — | | — | — | 40—110 | 40—130 | 192200 (19600) | 210300 (21440) | 226075 (23050) |
| 2403-3714 | | | 2 | H7—9H | | | | | | 7,000 | | 50,026 | +0,102 | | | | | |
| 2403-3715 | | | | H8—11H | | | | | | | | 50,087 | +0,202 | | | | | |
| 2403-3716 | 70×4 | 16 | 1 | — | 64,0 | 7,207 | 62 | | 61,4 | — | — | — | — | 36—82 | 36—100 | 187850 (19150) | 205520 (20950) | 220950 (22520) |
| 2403-3717 | | | 2 | H7—9H | | | | | | 7,000 | 6,6 | 55,478 | +0,093 | | | | | |
| 2403-3718 | | | | H8—11H | | | | | | | | 55,534 | +0,186 | | | | | |
| 2403-3719 | | | 1 | — | | | | | | — | — | — | — | 40—110 | 40—130 | 194200 (19800) | 212475 (21660) | 228400 (23280) |
| 2403-3721 | | | 2 | H7—9H | | | | | | 7,000 | 6,6 | 55,478 | +0,093 | | | | | |
| 2403-3722 | | | | H8—11H | | | | | | | | 55,534 | +0,186 | | | | | |
| 2403-3723 | 75×4 | 17 | 1 | — | 68,0 | 7,784 | 67 | | 66,4 | — | — | — | — | 36—88 | 36—105 | 243450 (24820) | 266340 (27150) | 286300 (29190) |
| 2403-3724 | | | 2 | H7—9H | | | | | | 7,000 | 6,6 | 60,241 | +0,088 | | | | | |
| 2403-3725 | | | | H8—11H | | | | | | | | 60,294 | +0,175 | | | | | |
| 2403-3726 | | | 1 | — | | | | | | — | — | — | — | 45—116 | 45—140 | 243750 (24850) | 266700 (27190) | 286700 (29230) |
| 2403-3727 | | | 2 | H7—9H | | | | | | 7,000 | 6,6 | 60,241 | +0,088 | | | | | |
| 2403-3728 | | | | H8—11H | | | | | | | | 60,294 | +0,175 | | | | | |
| 2403-3729 | 80×4 | 18 | 1 | — | 72,0 | 8,362 | 72 | | 71,4 | — | — | — | — | 36—88 | 36—105 | 257800 (26280) | 282050 (28750) | 303200 (30910) |
| 2403-3731 | | | 2 | H7—9H | | | | | | 7,000 | 6,6 | 65,530 | +0,084 | | | | | |
| 2403-3732 | | | | H8—11H | | | | | | | | 65,580 | +0,169 | | | | | |

Размеры, мм

| Обозначение протяжки | $D \times m$ | $z$ | Номер прохода | Сочетание полей допусков $D$ и $e$ | $d$ | $e$ | $D_a$ (поле допуска H11) | $K$ | $d_e$ (поле допуска H11) | $d_p$ | $h$ | $M_B$ | | Длина протягивания | | Усилие протягивания $P$, Н (кгс), при переднем угле | | |
|---|---|---|---|---|---|---|---|---|---|---|---|---|---|---|---|---|---|---|
| | | | | | | | | | | | | Наим. | Верхн. откл. | Сталь и алюминиевые сплавы | Чугун, бронза, латунь | 20° | 15° | 10° |
| 2403-3733 | 80×4 | 18 | 1 | — | 72,0 | 8,362 | 72 | 0,60 | 71,4 | — | — | — | — | 45—116 | 45—140 | 258100 (26310) | 282400 (28790) | 303575 (30950) |
| 2403-3734 | | | 2 | H7—9H | | | | | | 7,000 | 6,6 | 65,530 | +0,084 | | | | | |
| 2403-3735 | | | | H8—11H | | | | | | | | 65,580 | +0,169 | | | | | |
| 2403-3736 | 85×4 | 20 | 1 | — | 80,0 | 6,630 | 77 | | 76,4 | — | — | — | — | 36—88 | 36—105 | 280750 (28620) | 307150 (31310) | 330200 (33660) |
| 2403-3737 | | | 2 | H7—9H | | | | | | 7,000 | 6,6 | 70,400 | +0,097 | | | | | |
| 2403-3738 | | | | H8—11H | | | | | | | | 70,458 | +0,193 | | | | | |
| 2403-3739 | | | 1 | — | | | | | | — | — | — | — | 45—124 | 45—150 | 308250 (31420) | 337250 (34380) | 362550 (36960) |
| 2403-3741 | | | 2 | H7—9H | | | | | | 7,000 | 6,6 | 70,400 | +0,097 | | | | | |
| 2403-3742 | | | | H8—11H | | | | | | | | 70,458 | +0,193 | | | | | |
| 2403-3743 | 90×4 | 21 | 1 | — | 84,0 | 7,207 | 82 | | 81,4 | — | — | — | — | 36—88 | 36—105 | 296850 (30260) | 324800 (33110) | 349150 (35600) |
| 2403-3744 | | | 2 | H7—9H | | | | | | 7,000 | 6,6 | 75,262 | +0,092 | | | | | |
| 2403-3745 | | | | H8—11H | | | | | | | | 75,317 | +0,182 | | | | | |
| 2403-3746 | | | 1 | — | | | | | | — | — | — | — | 45—124 | 45—150 | 326150 (33250) | 356850 (36380) | 383600 (39110) |
| 2403-3747 | | | 2 | H7—9H | | | | | | 7,000 | 6,6 | 75,262 | +0,092 | | | | | |
| 2403-3748 | | | | H8—11H | | | | | | | | 75,317 | +0,182 | | | | | |
| 2403-3749 | 95×4 | 22 | 1 | — | 88,0 | 7,781 | 87 | | 86,4 | — | — | — | — | 36—88 | 36—105 | 312000 (31810) | 341350 (34800) | 366950 (37410) |
| 2403-3751 | | | 2 | H7—9H | | | | | | 7,000 | 6,6 | 80,530 | +0,088 | | | | | |
| 2403-3752 | | | | H8—11H | | | | | | | | 80,583 | +0,175 | | | | | |
| 2403-3753 | | | 1 | — | | | | | | — | — | — | — | 45—124 | 45—150 | 342850 (34950) | 375100 (38240) | 403225 (41110) |
| 2403-3754 | | | 2 | H7—9H | | | | | | 7,000 | 6,6 | 80,530 | +0,088 | | | | | |
| 2403-3755 | | | | H8—11H | | | | | | | | 80,583 | +0,175 | | | | | |
| 2403-3756 | 100×4 | 24 | 1 | — | 96,0 | 6,052 | 92 | | 91,4 | — | — | — | — | 36—88 | 36—105 | 332800 (33930) | 364100 (37120) | 391400 (39900) |
| 2403-3757 | | | 2 | H7—9H | | | | | | 7,000 | — | 85,302 | +0,099 | | | | | |
| 2403-3758 | | | | H8—11H | | | | | | | | 85,362 | +0,198 | | | | | |
| 2403-3759 | | | 1 | — | | | | | | — | | — | — | 45—116 | 45—140 | 379850 (38730) | 415600 (42370) | 446775 (45550) |
| 2403-3761 | | | 2 | H7—9H | | | | | | 7,000 | | 85,302 | +0,099 | | | | | |
| 2403-3762 | | | | H8—11H | | | | | | | | 85,362 | +0,198 | | | | | |
| 2403-3763 | 105×4 | 25 | 1 | — | 100,0 | 6,630 | 97 | | 96,4 | — | — | — | — | 36—88 | 36—105 | 349400 (35620) | 382250 (38970) | 410925 (41890) |
| 2403-3764 | | | 2 | H7—9H | | | | | | 7,000 | 6,6 | 90,239 | +0,094 | | | | | |
| 2403-3765 | | | | H8—11H | | | | | | | | 90,295 | +0,188 | | | | | |

*Продолжение табл. 9*

Размеры, мм

| Обозначение протяжки | $D \times m$ | $z$ | Номер прохода | Сочетание полей допусков $D$ и $e$ | $d$ | $e$ | $D_a$ (поле допуска H11) | $K$ | $d_\phi$ (поле допуска H11) | $d_p$ | $h$ | $M_B$ Наим. | $M_B$ Верхн. откл. | Длина протягивания: Сталь и алюминиевые сплавы | Длина протягивания: Чугун, бронза, латунь | Усилие протягивания $P$, Н (кгс), при переднем угле: 20° | 15° | 10° |
|---|---|---|---|---|---|---|---|---|---|---|---|---|---|---|---|---|---|---|
| 2403-3766 | 105×4 | 25 | 1 | — | 100,0 | 6,630 | 97 | 0,60 | 96,4 | — | — | — | — | 45—116 | 45—140 | 399075 (40680) | 436625 (44510) | 469375 (47850) |
| 2403-3767 | | | 2 | H7—9H | | | | | | 7,000 | 6,6 | 90,239 | +0,094 | | | | | |
| 2403-3768 | | | | H8—11H | | | | | | | | 90,295 | +0,188 | | | | | |
| 2403-3769 | 110×4 | 26 | 1 | — | 101,0 | 7,207 | 102 | | 101,4 | — | — | — | — | 36—78 | 36—95 | 331800 (33830) | 363000 (37010) | 390225 (39800) |
| 2403-3771 | | | 2 | H7—9H | | | | | | 7,000 | 6,6 | 95,508 | +0,102 | | | | | |
| 2403-3772 | | | | H8—11H | | | | | | | | 95,570 | +0,202 | | | | | |
| 2403-3773 | | | 1 | — | | | | | | — | — | — | — | 45—106 | 45—125 | 361950 (36900) | 396025 (40370) | 425725 (43400) |
| 2403-3774 | | | 2 | H7—9H | | | | | | 7,000 | 6,6 | 95,508 | +0,102 | | | | | |
| 2403-3775 | | | | H8—11H | | | | | | | | 95,570 | +0,202 | | | | | |
| 2403-3776 | 120×4 | 28 | 1 | — | 112,0 | 8,362 | 112 | | 111,4 | — | — | — | — | 36—78 | 36—95 | 368300 (37550) | 402950 (41080) | 433175 (44160) |
| 2403-3777 | | | 2 | H7—9H | | | | | | 7,000 | 6,6 | 105,538 | +0,096 | | | | | |
| 2403-3778 | | | | H8—11H | | | | | | | | 105,596 | +0,191 | | | | | |
| 2403-3779 | | | 1 | — | | | | | | — | — | — | — | 45—106 | 45—125 | 401550 (40940) | 439350 (44790) | 472300 (48150) |
| 2403-3781 | | | 2 | H7—9H | | | | | | 7,000 | 6,6 | 105,538 | +0,096 | | | | | |
| 2403-3782 | | | | H8—11H | | | | | | | | 105,596 | +0,191 | | | | | |
| 2403-3783 | 130×4 | 31 | 1 | — | 124,0 | 7,207 | 122 | | 121,4 | — | — | — | — | 36—78 | 36—95 | 394300 (40200) | 431400 (43980) | 463750 (47280) |
| 2403-3784 | | | 2 | H7—9H | | | | | | 7,000 | 6,6 | 115,357 | +0,100 | | | | | |
| 2403-3785 | | | | H8—11H | | | | | | | | 115,418 | +0,200 | | | | | |
| 2403-3786 | | | 1 | — | | | | | | — | — | — | — | 45—100 | 45—120 | 394700 (40230) | 431840 (44020) | 464225 (47320) |
| 2403-3787 | | | 2 | H7—9H | | | | | | 7,000 | 6,6 | 115,357 | +0,100 | | | | | |
| 2403-3788 | | | | H8—11H | | | | | | | | 115,418 | +0,200 | | | | | |
| 2403-3789 | 70×5 | 12 | 1 | — | 60,0 | 10,452 | 60 | 0,75 | 59,4 | — | — | — | — | 40—94 | 40—110 | 190900 (19460) | 208850 (21290) | 224500 (22890) |
| 2403-3791 | | | 2 | H7—9H | | | | | | 8,690 | 8,3 | 52,078 | +0,093 | | | | | |
| 2403-3792 | | | | H8—11H | | | | | | | | 52,135 | +0,185 | | | | | |
| 2403-3793 | 75×5 | 13 | 1 | — | 65,0 | | 65 | | 64,4 | — | — | — | — | | | 202800 (20670) | 221900 (22620) | 238550 (24320) |
| 2403-3794 | | | 2 | H7—9H | | | | | | 8,690 | — | 56,599 | +0,093 | | | | | |
| 2403-3795 | | | | H8—11H | | | | | | | | 56,656 | +0,185 | | | | | |
| 2403-3796 | 80×5 | 14 | 1 | — | 70,0 | | 70 | | 69,4 | — | — | — | — | | | 215050 (21930) | 235300 (23990) | 252950 (25790) |
| 2403-3797 | | | 2 | H7—9H | | | | | | 8,690 | 8,3 | 62,080 | +0,094 | | | | | |
| 2403-3798 | | | | H8—11H | | | | | | | | 62,137 | +0,187 | | | | | |

Размеры, мм

| Обозначение протяжки | $D \times m$ | $z$ | Номер прохода | Сочетание полей допусков $D$ и $e$ | $d$ | $e$ | $D_a$ (поле допуска H11) | $K$ | $d_e$ (поле допуска H11) | $d_p$ | $h$ | $M_B$ Наим. | $M_B$ Верхн откл. | Длина протягивания: Сталь и алюминиевые сплавы | Длина протягивания: Чугун, бронза, латунь | Усилие протягивания $P$, Н (кгс) при переднем угле: 20° | 15° | 10° |
|---|---|---|---|---|---|---|---|---|---|---|---|---|---|---|---|---|---|---|
| 2403-3799 | 85×5 | 15 | 1 | — | 75,0 | 10,452 | 75 | 0,75 | 74,4 | — | — | — | — | 40—94 | 40—110 | 238925 (24360) | 261400 (26650) | 281000 (28650) |
| 2403-3801 | | | 2 | H7—9H | | | | | | 8,690 | — | 66,665 | +0,094 | | | | | |
| 2403-3802 | | | | H8—11H | | | | | | | | 66,722 | +0,187 | | | | | |
| 2403-3803 | 90×5 | 16 | 1 | — | 80,0 | | 80 | | 79,4 | — | 8,3 | — | — | | | 263800 (26890) | 288610 (29420) | 310250 (31630) |
| 2403-3804 | | | 2 | H7—9H | | | | | | 8,690 | | 72,081 | +0,095 | | | | | |
| 2403-3805 | | | | H8—11H | | | | | | | | 72,138 | +0,188 | | | | | |
| 2403-3806 | 95×5 | 18 | 1 | — | 90,0 | 7,565 | 85 | | 84,4 | — | — | — | — | | | 272275 (27760) | 297900 (30370) | 320250 (32650) |
| 2403-3807 | | | 2 | H7—9H | | | | | | 8,690 | | 76,694 | +0,118 | | | | | |
| 2403-3808 | | | | H8—11H | | | | | | | | 76,766 | +0,235 | | | | | |
| 2403-3809 | 100×5 | | 1 | — | | 10,452 | 90 | | 89,4 | — | 8,3 | — | — | | | 289700 (29530) | 316950 (32310) | 340725 (34730) |
| 2403-3811 | | | 2 | H7—9H | | | | | | 8,690 | | 82,082 | +0,095 | | | | | |
| 2403-3812 | | | | H8—11H | | | | | | | | 82,140 | +0,188 | | | | | |
| 2403-3813 | 105×5 | 20 | 1 | — | 100,0 | 7,565 | 95 | | 94,4 | — | — | — | — | | | 309600 (31560) | 338740 (34530) | 364150 (37120) |
| 2403-3814 | | | 2 | H7—9H | | | | | | 8,690 | | 86,747 | +0,115 | | | | | |
| 2403-3815 | | | | H8—11H | | | | | | | | 86,816 | +0,229 | | | | | |
| 2403-3816 | 110×5 | | 1 | — | | 10,452 | 100 | | 99,4 | — | 8,3 | — | — | 36—78 | 36—95 | 327525 (33390) | 358350 (36530) | 385225 (39270) |
| 2403-3817 | | | 2 | H7—9H | | | | | | 8,690 | | 92,083 | +0,095 | | | | | |
| 2403-3818 | | | | H8—11H | | | | | | | | 92,141 | +0,189 | | | | | |
| 2403-3819 | 120×5 | 22 | 1 | — | 110,0 | | 110 | | 109,4 | — | — | — | — | | | 354225 (36110) | 387550 (39510) | 416600 (42470) |
| 2403-3821 | | | 2 | H7—9H | | | | | | 8,690 | 8,3 | 102,089 | +0,107 | | | | | |
| 2403-3822 | | | | H8—11H | | | | | | | | 102,154 | +0,211 | | | | | |
| 2403-3823 | 130×5 | 24 | 1 | — | 120,0 | | 120 | | 119,4 | — | — | — | — | | | 392350 (40000) | 429250 (43760) | 461450 (47050) |
| 2403-3824 | | | 2 | H7—9H | | | | | | 8,690 | 8,3 | 112,090 | +0,107 | | | | | |
| 2403-3825 | | | | H8—11H | | | | | | | | 112,154 | +0,212 | | | | | |

4. Наибольшие расчетные усилия протягивания *P* указаны для обработки деталей из стали I—IV групп обрабатываемости по ГОСТ 20365.

Для определения усилия протягивания для закаленных сталей и других материалов следует величину *P* умножить на коэффициент *K*, указанный в ГОСТ Р 50035.

5. Центровые отверстия формы B, T или R — по ГОСТ 14034.

6. Хвостовики типа 2 исполнения *1* — по ГОСТ 4044.

Изготовление протяжек с хвостовиком типа 2 исполнений *2, 3* или *4* — по взаимной договоренности потребителя с изготовителем.

Продольные лыски на хвостовиках исполнений *2* и *4* должны располагаться перпендикулярно оси впадины профиля протяжки.

Допуск перпендикулярности на 10 мм ширины лыски не должен превышать 0,015 мм.

Длину лыски на заднем хвостовике указывает потребитель при заказе.

7. Допуск симметричности боковых поверхностей фасочных зубьев относительно боковых поверхностей шлицевых зубьев не должен превышать T 0,1 мм

8. Форма и размеры профиля зубьев протяжек, группы заточки, форма передней грани зубьев протяжек — по ГОСТ 20365.

9. Задний угол зубьев протяжек должен быть:

| | |
|---|---|
| черновых и переходных . . . . | 3° |
| чистовых . . . . . | 2° |
| калибрующих . . . . . | 1° |

10. Пределы длины протягивания заготовок из чугуна, бронзы и латуни — справочные. Для протягивания заготовок из этих материалов с длиной протягивания, превышающей верхний предел длины протягивания по стали, следует применять навертной хвостовик увеличенной длины.

11. Технические требования — по ГОСТ 28442.

## ИНФОРМАЦИОННЫЕ ДАННЫЕ

**1. РАЗРАБОТАН И ВНЕСЕН** Техническим комитетом стандартизации **«ИНСТРУМЕНТ» ТК 95**

**РАЗРАБОТЧИКИ:**

**А. С. Симкин, А. И. Либерман, И. Н. Зазулина, Г. Н. Осипова, А. И. Прохорова**

**2. УТВЕРЖДЕН И ВВЕДЕН В ДЕЙСТВИЕ** Постановлением Госстандарта России от 22.07.92 № 750

**3. Срок проверки 1998 г., периодичность проверки 5 лет**

**4. ВВЕДЕН ВПЕРВЫЕ**

**5. ССЫЛОЧНЫЕ НОРМАТИВНО-ТЕХНИЧЕСКИЕ ДОКУМЕНТЫ**

| Обозначение НТД на который дана ссылка | Номер пункта |
|---|---|
| ГОСТ 2475—88 | 1 |
| ГОСТ 4044—70 | 6 |
| ГОСТ 6033—80 | Вводная часть |
| ГОСТ 14034—74 | 5 |
| ГОСТ 20365—74 | 4,8 |
| ГОСТ 28048—89 | 1 |
| ГОСТ 28442—90 | 11 |
| ГОСТ Р 50035—92 | 4 |